Automation for a Changing World

Delta Vector Control Drive C2000 Series

reddot design award
winner 2010

www.deltaww.com

DELTA
Smarter. Greener. Together.

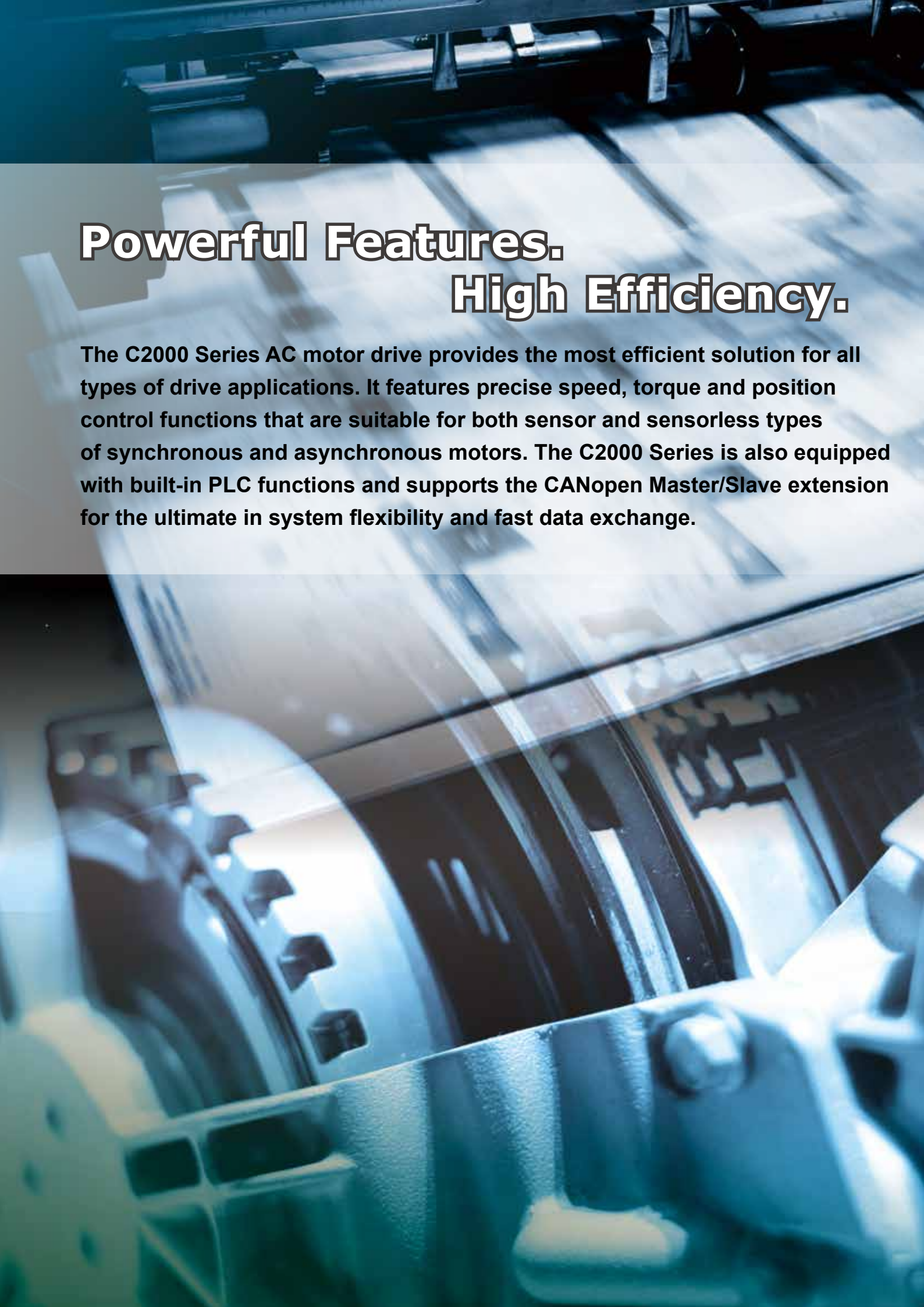

Powerful Features. High Efficiency.

The C2000 Series AC motor drive provides the most efficient solution for all types of drive applications. It features precise speed, torque and position control functions that are suitable for both sensor and sensorless types of synchronous and asynchronous motors. The C2000 Series is also equipped with built-in PLC functions and supports the CANopen Master/Slave extension for the ultimate in system flexibility and fast data exchange.

Table of Contents

Standard Models 3

Advanced Drive Controls 3

Modular Design 5

Certifications 6

LCD Keypad 7

Features and Applications 8

High-speed networks
Convenient operation platform
High performance field oriented control
Fast response to impact load
Auto energy saving operation
DEB function
Permanent magnet motors (SPM, IPM)
REG2000 Series
AFE2000 Series

Active Front End AFE2000 Series 11

Operation Temperature and Protection Level 12

Environment for Operation, Storage and Transportation 13

Specifications 13

Wiring
Dimensions
Option cards
Ordering information

Standard Models (IP20/NEMA1)

Power range : 230 V 0.75 ~ 90 kW

230 V (kW)	0.75	1.5	2.2	3.7	5.5	7.5	11	15	18.5	22	30	37	45	55	75	90
230 V (HP)	1	2	3	5	7.5	10	15	20	25	30	40	50	60	75	100	125
Frame Size	A				B			C			D		E			F

Power range : 460 V 0.75 ~ 450 kW

460 V (kW)	0.75	1.5	2.2	3.7	4.0	5.5	7.5	11	15	18.5	22	30	37	45	55	75
460 V (HP)	1	2	3	5	5	7.5	10	15	20	25	30	40	50	60	75	100
Frame Size	A						B			C			D0		D	

Power range: 575 V 1.5 ~ 15 kW

575 V (kW)	1.5	2.2	3.7	5.5	7.5	11	15
575 V (HP)	2	3	5	7.5	10	15	20
Frame Size	A			B			

Power range: 690 V 18.5 ~ 630 kW

690 V (kW)	18.5	22	30	37	45	55	75	90	110	132	160	200	250	315	400	450
690 V (HP)	25	30	40	50	60	75	100	125	150	175	215	270	335	425	530	600
Frame Size	C				D		E				F		G		H	

Advanced Drive Controls

▪ High Performance

1. High bandwidth control
2. Speed / torque / position control mode
3. Dual rating design (normal duty / heavy duty)
4. 4-quadrant torque control and limit
5. For both synchronous and asynchronous motors

▪ Environmental Adaptability

1. 50℃ operating temperature
2. Built-in DC reactor
3. Coated circuit boards
4. Built-in EMC filter
5. International safety standard (CE/UL/cUL)

*Note: Please refer to the Product Specification

90	110	132	160	185	220	280	315	355	450
125	150	175	215	250	300	375	425	475	600
E		F		G		H			

560	630
745	840

▪ Versatile Drive Controls

1. Built-in safe stop function
2. Built-in PLC function
3. Built-in brake unit
4. Supports various network protocols
5. Position control

▪ Modular Design

1. Hot pluggable LCD keypad
2. I/O extension cards
3. Various PG (encoder) feedback cards
4. Network cards for fieldbus modules
5. Removable fan

Modular Design

Various accessories options, such as I/O extension cards, encoder feedback cards, communication cards, hot pluggable LCD keypad, removable terminals and removable fans.

▶ I/O extension cards

EMC-D611A

EMC-D42A

EMC-A22A

▶ PG (Encoder) cards

EMC-PG01O / EMC-PG02O

EMC-PG01U / EMC-PG02U

EMC-PG01L / EMC-PG02L

EMC-PG01R

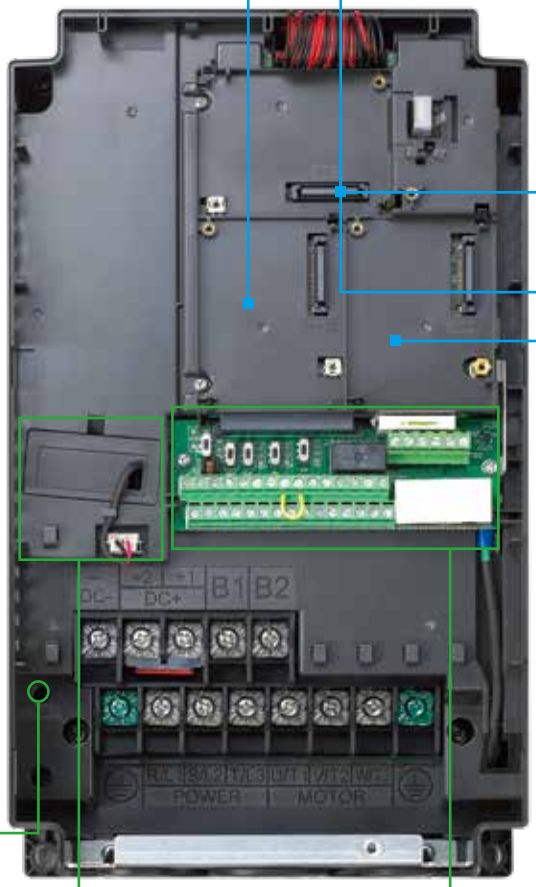

▶ 24V Power Shift Card

EMC-BPS01

▶ Relay Extension Card

EMC-R6AA

▶ Communication cards

CMC-PD01

CMC-DN01

CMC-MOD01 / CMC-EIP01

EMC-COP01

CMC-EC01

*NOTE: "▶" are optional accessories.

■ Removable fan

To ensure personal safety, do not begin wiring before the indicator light is off.

■ Power indicator

To prevent personal injury, please do not perform wiring before power indicator is off.

■ Removable terminals

Convenient wiring and safety equipment.

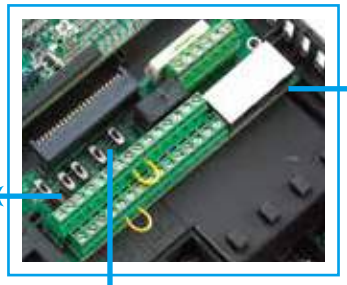

Analog I/O switch

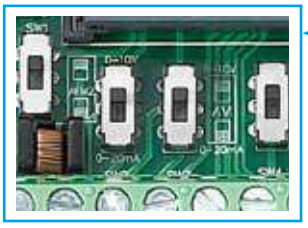

Termination resistor

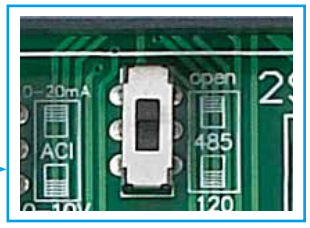

Dual RJ45 communication ports

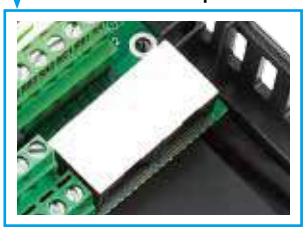

The modular design fulfills the needs of system applications and equipment maintenance.

- KPC-CC01 keypad
- Standard RJ45 network cable for remote operation.
- Easy to remove with one press.

- The product nameplate shows the input / output voltage, input / output current, the frequency range, and more.

- Remove the safety screws and press on both side tabs to remove the cover.

- Modular fan design, easy to replace and clean, extending product service life.

- RFI Jumper

Excellent Environment Adaptability

- Built-in DC choke to surpress harmonics*
- Built-in EMC filter to filter noise*
- Conformal coating (Class 3C3 of IEC60721-3-3 standard) ensures drive operation stability and safety in critical environments.
- The electronic components of the drive are isolated from the cooling system to reduce heat interference. Dissipated heat can be discharged by flange-mounting installation, and forced fan cooling can import cold air into the heat sink. The heat dissipation performance is optimized by these two cooling methods.

*Note: Please refer to the Product Specification

Certifications

UL, cUL	**CE** Low Voltage: EN61800-5-1 EMC: EN61000-3-12, EN61800-3, IEC61000-6-2, IEC61000-6-4, IEC61000-4-2, IEC61000-4-3, IEC61000-4-4, IEC61000-4-5, IEC61000-4-6, IEC61000-4-8
C-Tick	
ROHS	

Quick and Easy Parameters Setting via the LCD Keypad

- Multi-column display for the drive status
- Simple and intuitive operation
- User-defined parameter groups
- Real Time Clock and calendar function
- Language selection for display
- Copy function saves parameters and PLC programs to the keypad memory for later transfer to another drive
- IP66 protection level

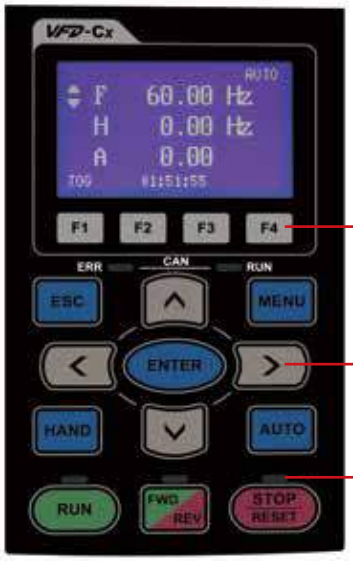

F1 to F4: User-defined function keys

Selection keys

LED displays the current drive status

Create homepage logo

Editable message display

Editable chart display

Intelligent PLC Functions

- Built-in 10 K steps capacity of PLC functions. Distributed control and independent operation are easily achieved via network connection.
- CANopen Master protocol and PLC functions provide synchronous control and fast data exchange.

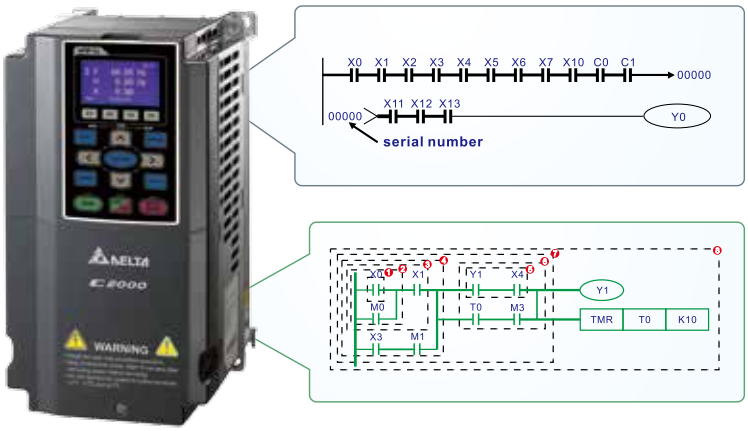

High-Speed Network

- Provides optional MODBUS RTU and various fieldbus cards for flexible applications
- Advanced network functions
- Built-in MODBUS communication

■ PROFIBUS

■ CANopen (DS402)

Ability to control up to 8 Slave drives via the CANopen Master function

- Supports all Delta industrial automation products (Built-in EDS files for all Delta industrial automation products)
- I/O data configurations for each device on the CANopen network
- Motion control planning function
- WPL Soft

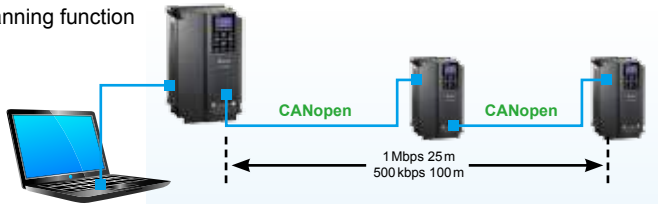

- TAP-CN03 distribution box for long distances

- RJ45 cable

■ DeviceNet

Through the Delta specially designed DeviceNet Builder software, users can easily establish a standard DeviceNet control network by the parameter pre-assignment function for each equipment and remote I/O.

- Supports all Delta industrial automation products (Built-in EDS files for all Delta industrial automation products)
- I/O data configurations for each device on the DeviceNet network
- DeviceNet layout software

■ EtherNet/IP

■ MODBUS TCP

Delta provides communication integrator software that offers graphic module settings and a user friendly interface to support all Ethernet products settings and online monitoring.

- Delta software for Ethernet/MODBUS TCP products
- Graphic module settings and a user friendly interface
- Auto search function
- Supports Virtual COM settings

Convenient Drive System Management Platform

■ Provides a complete operation platform for users' easy control and monitoring via PC, including parameters save/setting, real-time wave monitor, quick setup, for multiple languages and with multi-language operation systems.

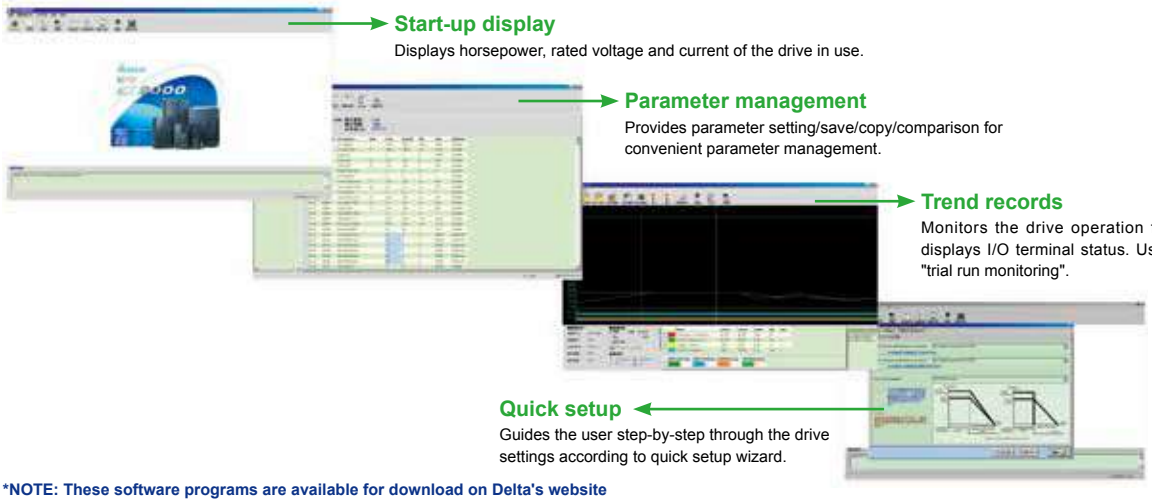

Start-up display
Displays horsepower, rated voltage and current of the drive in use.

Parameter management
Provides parameter setting/save/copy/comparison for convenient parameter management.

Trend records
Monitors the drive operation form via network and displays I/O terminal status. Useful for tasks such as "trial run monitoring".

Quick setup
Guides the user step-by-step through the drive settings according to quick setup wizard.

*NOTE: These software programs are available for download on Delta's website

High-Performance Field Oriented Control

The FOC+PG mode of C2000 Series can output 150% of starting torque at extremely low speeds for precise and stable speed control.

Precise position and speed control ideal for printing machine applications.

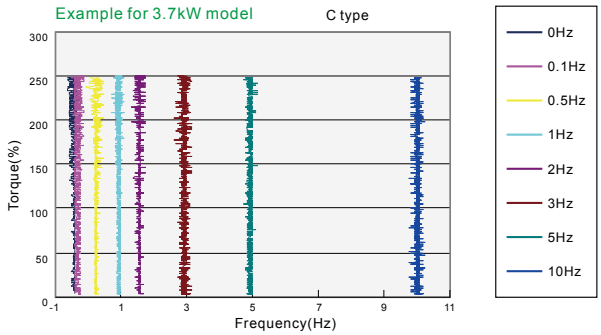

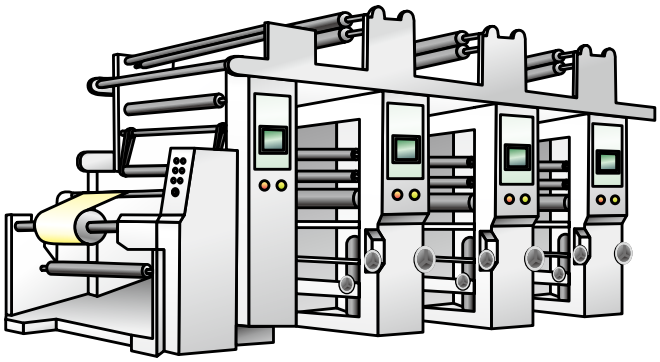

Fast Response to Impact Load

During load changes, the C2000 Series calculates the required torque response and minimizes the vibration caused by load impact using FOC.

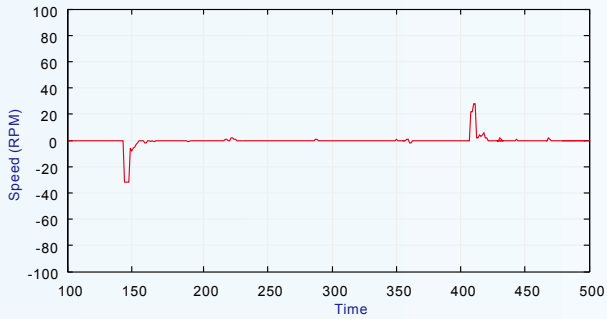

Auto Energy-Saving Operation

Auto-calculates the optimal voltage for the load output using load power when under constant speed operation.

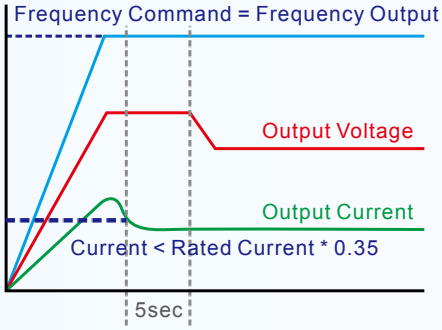

Deceleration Energy Backup (DEB)

This function controls the motor deceleration to stop when power blinks off to prevent mechanical damage and then accelerates to its original operation speed when power resumes.

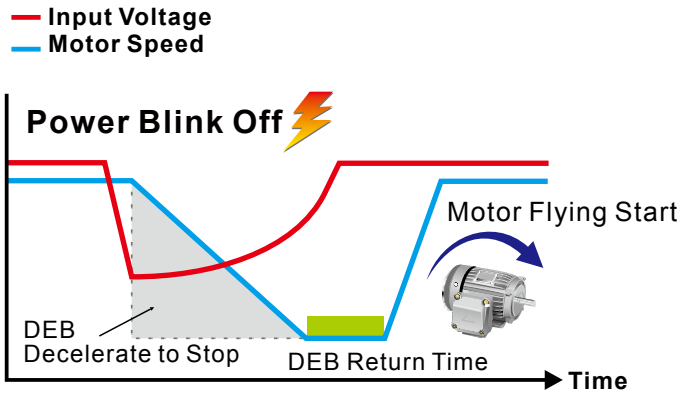

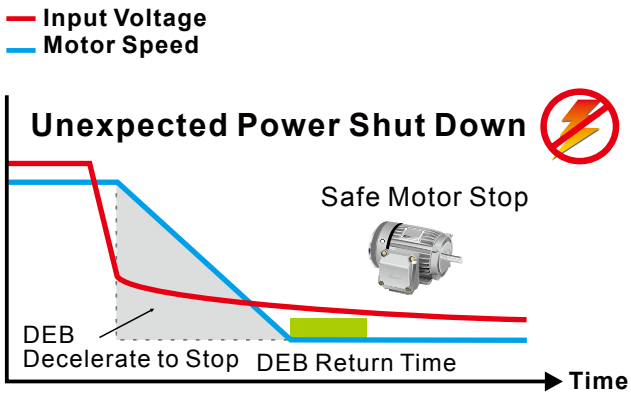

A Drive for Permanent Magnet (PM) Motors

The C2000 is a dual mode drive to control both an induction motor and permanent magnet motor. The dynamic response of a PM motor provides precise control of position, speed and torque.

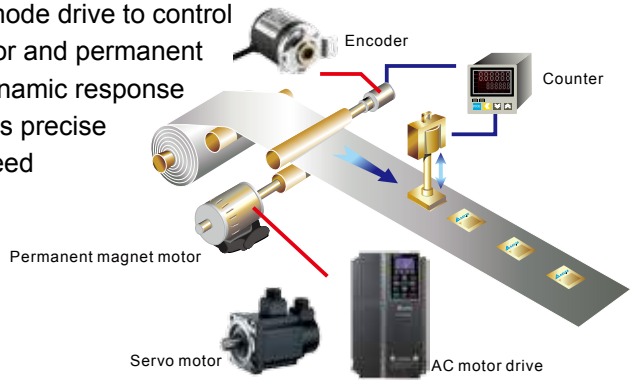

Delta REG2000 Series for Power Regeneration

Using the REG2000 with the C2000 in a crane and hoist application provides the user with a four-quadrant operation and energy saving results.

Delta AFE2000 Series for Power Regeneration and Power Quality Improvement

The Active Front End Unit (AFE2000) helps to reduce torque ripple and harmonics with a higher power factor to provide excellent production quality and outstanding energy saving results.

Delta Active Front End AFE2000 Series

Features

- Replaces traditional brake resistor to reduce heat generation.
- Clear energy savings: more than 95% of the regenerative energy is converted into electricity and supplied back to the mains.
- Full-load operation: input-side current THD lower than 5% and improves power factor up to 99%.
- AC motor drives with AFE2000: supports 4-quadrant operation with variable frequencies and adjustable system.
- Constant DC bus voltage: unaffected by mains voltage fluctuations.

Improves power factor and decreases harmonic distortion.
THD<=5%, power factor > 99%

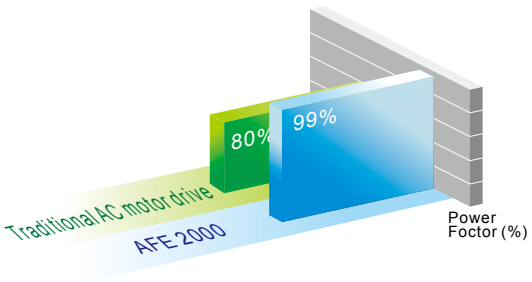

Improves power factor by 20%

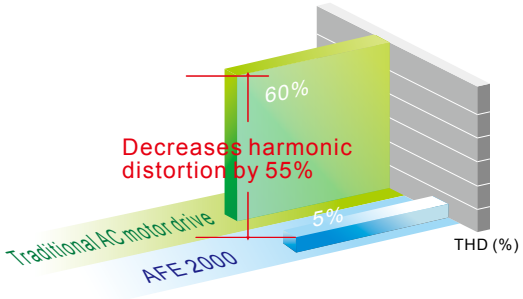

Applications

- Large-inertia loads, such as centrifuge equipment, dewatering machines and roving machines
- 4-quadrant loads including elevators, cranes and pumpjacks (oil extraction machines)
- Quick braking, such as machine tools, bag making machines, auto storage and retrieval systems, and lathes
- Long-term energy feedback, such as wind power, water power, steel printing and paper making machinery (winding equipment)
- Improves power quality for industries such as semiconductor and panel industries

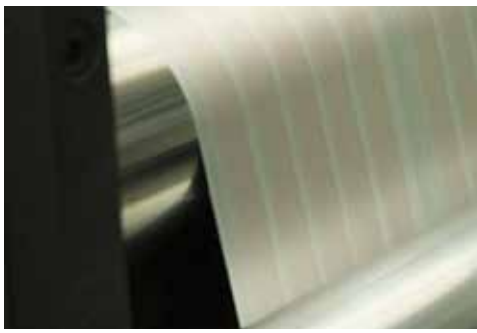

Operation Temperature and Protection Level

Model	Frame	Top Cover	Conduit Box	Protection Level	OperationTemperature
VFDxxxCxxA VFDxxxCxxS	Frame A ~ C 230 V: 0.75 ~ 22 kW 460 V: 0.75 ~ 30 kW	Remove top cover	Standard conduit plate	IP20 / UL Open Type	-10 °C ~ 50 °C
		Standard with top cover		IP20 / UL Type1 / NEMA1	-10 °C ~ 40 °C
	Frame D ~ H 230 V: > 22 kW 460 V: > 30 kW	N / A	No conduit box	 Protection degree for the circled area is IP00, other areas are IP20	-10 °C ~ 50 °C
VFDxxxCxxE VFDxxxCxxU	Frame A ~ C 460 V: 0.75 ~ 30 kW	Remove top cover	Standard conduit plate	IP20 / UL Open Type	-10 °C ~ 50 °C
		Standard with top cover		IP20 / UL Type1 / NEMA1	-10 °C ~ 40 °C
	Frame D ~ H 230 V: > 22 kW 460 V: > 30 kW	N / A	Standard conduit box	IP20 / UL Type1 / NEMA1	-10 °C ~ 40 °C
VFDxxxC53A-21 VFDxxxC63B-21	Frame A ~ C 1.5 ~ 37 kW	Remove top cover	Standard conduit plate	IP20 / UL Open Type	-10 °C ~ 50 °C
		Standard with top cover		IP20 / UL Type1 / NEMA1	-10 °C ~ 40 °C
VFDxxxC63B-21	Frame D ~ H > 45 kW	N / A	Standard conduit box	IP20 / UL Type1 / NEMA1	-10 °C ~ 40 °C
VFDxxxC63B-00	Frame D ~ H > 45 kW	N / A	No conduit box	 Protection degree for the circled area is IP00, other areas are IP20	-10 °C ~ 50 °C

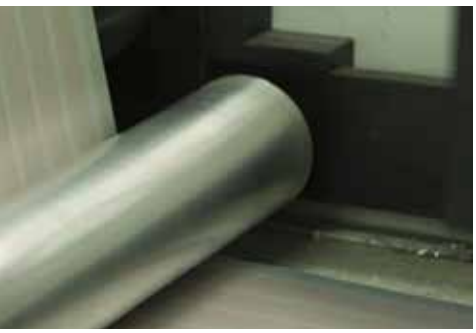

Environment for Operation, Storage and Transportation

DO NOT expose the AC motor drive to harsh environments, such as dust, direct sunlight, corrosive/flammable gasses, humidity, liquid or vibrations. The salts in the air must be less than 0.01 mg/cm² per year.

Environment	Installation Location	IEC60364-1/IEC60664-1 Pollution degree 2, indoor use only	
	Surrounding Temperature (°C)	Storage/Transportation	-25 ~ 70
		Only allowed in non-condensation, non-frost, non-conductive environment.	
	Rated Humidity	Operation/Storage/Transportation	Max. 95%
		Only allowed in non-condensation, non-frost, non-conductive environment.	
	Air Pressure (kPa)	Operation/Storage	86 ~ 106
		Transportation	70 ~ 106
	Pollution Level	IEC60721-3-3	
		Operation	Class 3C3; Class 3S2
		Storage	Class 1C2; Class 1S2
		Transportation	Class 2C2; Class 2S2
		If the AC motor drive is to be used under harsh environment with high level of contamination (e.g. dew, water, dust), make sure it is installed in an environment qualified for IP54 such as in a cabinet.	
	Altitude	Operation	If the AC motor drive is installed at an altitude 0 ~ 1000 m, follow normal operation restriction. If it is installed at altitude 1000 ~ 2000 m, decrease 1% of rated current or lower 0.5°C of temperature for every 100 m increase in altitude. Maximum altitude for Corner Grounded TN system is 2000m, for application over 2000m please contact Delta for more details.
Package Drop		Storage/Transportation	ISTA procedure 1A (according to weight) IEC60068-2-31
Vibration		1.0 mm, peak to peak value range from 2 Hz to 13.2 Hz; 0.7 G ~ 1.0 G range from 13.2 Hz to 55 Hz; 1.0 G range from 55 Hz to 512 Hz. Comply with IEC 60068-2-6.	
Impact		IEC/EN 60068-2-27	
Operation Position		Max. allowed offset angle ±10° (under normal installation position)	

Specifications

230 V																	
Frame Size			A				B			C			D		E		F
Model VFD- □□□C□□			007	015	022	037	055	075	110	150	185	220	300	370	450	550	750	900
Output Rating *	NORMAL DUTY	Rated Output Capacity (kVA)	2.0	3.2	4.4	6.8	10	13	20	26	30	36	48	58	72	86	102	138
		Rated Output Current (A)	5	8	11	17	25	33	49	65	75	90	120	146	180	215	255	346
		Applicable Motor Output (kW)	0.75	1.5	2.2	3.7	5.5	7.5	11	15	18.5	22	30	37	45	55	75	90
		Applicable Motor Output (HP)	1	2	3	5	7.5	10	15	20	25	30	40	50	60	75	100	120
		Overload Capacity	120% of rated current: 1 minute for every 5 minutes; 160% of rated current: 3 seconds for every 30 seconds															
		Max. Output Frequency (Hz)	0.00 ~ 599.00															
		Carrier Frequency (kHz)	2 ~ 15 (default setting 8)							2 ~ 10 (default setting 6)					2 ~ 9 (default setting 4)			
	HEAVY DUTY	Rated Output Capacity (kVA)	1.9	2.8	4.0	6.4	9.6	12	19	25	28	34	45	55	68	81	96	131
		Rated Output Current (A)	4.8	7.1	10	16	24	31	47	62	71	86	114	139	171	204	242	329
		Applicable Motor Output (kW)	0.4	0.75	1.5	2.2	3.7	5.5	7.5	11	15	19	22	30	37	45	55	75
		Applicable Motor Output (HP)	0.5	1	2	3	5	7.5	10	15	20	25	30	40	50	60	75	100
		Overload Capacity	150% of rated current: 1 minute for every 5 minutes; 180% of rated current: 3 seconds for every 30 seconds															
		Max. Output Frequency (Hz)	0.00 ~ 300.00															
		Carrier Frequency (kHz)	2 ~ 6 (default setting 2)															
Input Rating	Input Current (A)	Normal Duty	6.4	12	16	20	28	36	52	72	83	99	124	143	171	206	245	331
		Heavy Duty	6.1	11	15	18.5	26	34	50	68	78	95	118	136	162	196	233	315
	Rated Voltage/Frequency		3-phase AC 200 V ~ 240 V (-15% ~ +10%), 50/60 Hz															
	Operating Voltage Range		170 ~ 264 V_{ac}															
	Frequency Tolerance		47 ~ 63 Hz															
Drive Weight (Kg)			2.6 ± 0.3				5.4 ± 1			9.8 ± 1.5			38.5 ± 1.5		64.8 ± 1.5		86.5± 1.5
Efficiency (%)			97.8												98.2		
Power Factor			> 0.98														
Cooling Method			Natural cooling	Fan cooling													
Braking Chopper			Frame A, B, C: built-in										Frame D and above: optional				
DC Choke			Frame A, B, C: optional										Frame D and above: built-in				
EMC Filter			Optional														
EMC-COP01			Optional														

* The factory setting is Normal Duty mode

460 V

Frame Size			A						B			C		
Model VFD-□□□C□□			007	015	022	037	040	055	075	110	150	185	220	300
Output Rating *	NORMAL DUTY	Rated Output Capacity (kVA)	2.4	3.2	4.8	7.2	8.4	10	14	19	25	30	36	48
		Rated Output Current (A)	3.0	4.0	6.0	9.0	10.5	12	18	24	32	38	45	60
		Applicable Motor Output (kW)	0.75	1.5	2.2	3.7	4.0	5.5	7.5	11	15	18.5	22	30
		Applicable Motor Output (HP)	1	2	3	5	5	7.5	10	15	20	25	30	40
		Overload Capacity	120% of rated current: 1 minute for every 5 minutes; 160% of rated current: 3 seconds for every 30 seconds											
		Max. Output Frequency (Hz)	0.00 ~ 599.00											
		Carrier Frequency (kHz)	2 ~ 15 (default setting 8)							2 ~ 10 (default setting 6)				
	HEAVY DUTY	Rated Output Capacity (kVA)	2.3	3.0	4.5	6.5	7.6	9.6	14	18	24	29	34	45
		Rated Output Current (A)	2.9	3.8	5.7	8.1	9.5	11	17	23	30	36	43	57
		Applicable Motor Output (kW)	0.4	0.75	1.5	2.2	3.7	4.0	5.5	7.5	11	15	18.5	22
		Applicable Motor Output (HP)	0.5	1	2	3	5	5	7.5	10	15	20	25	30
		Overload Capacity	150% of rated current: 1 minute for every 5 minutes; 180% of rated current: 3 seconds for every 30 seconds											
		Max. Output Frequency (Hz)	0.00 ~ 300.00											
		Carrier Frequency (kHz)	2 ~ 6 (default setting 2)											
Input Rating	Input Current (A)	Normal Duty	4.3	5.9	8.7	14	15.5	17	20	26	35	40	47	63
		Heavy Duty	4.1	5.6	8.3	13	14.5	16	19	25	33	38	45	60
	Rated Voltage / Frequency		3-phase AC 380 V ~ 480 V (-15% ~ +10%), 50 / 60 Hz											
	Operating Voltage Range		323 ~ 528 V_{AC}											
	Frequency Tolerance		47 ~ 63 Hz											
Drive Weight (Kg)			2.6 ± 0.3						5.4 ± 1			9.8 ± 1.5		
Efficiency (%)			97.8											
Power Factor			> 0.98											
Cooling Method			Natural cooling	Fan cooling										
Braking Chopper			Frame A, B, C: built-in; Frame D and above: optional											
DC Choke			Frame A, B, C: optional; Frame D and above: built-in											
EMC Filter			VFDXXXC43A: Optional; Frame A~C VFDXXXC43E: Built-in											
EMC-COP01			VFDXXXC43A: optional; VFDXXC43E: built-in											

460 V

Frame Size			D0		D		E		F		G		H			
Model VFD-□□□C□□			370	450	550	750	900	1100	1320	1600	1850	2200	2800	3150	3550	4500
Output Rating *	NORMAL DUTY	Rated Output Capacity (kVA)	58	73	88	120	143	175	207	247	295	367	438	491	544	720
		Rated Output Current (A)	73	91	110	150	180	220	260	310	370	460	550	616	683	866
		Applicable Motor Output (kW)	37	45	55	75	90	110	132	160	185	220	280	315	355	450
		Applicable Motor Output (HP)	50	60	75	100	125	150	175	215	250	300	375	420	475	600
		Overload Capacity	120% of rated current: 1 minute for every 5 minutes; 160% of rated current: 3 seconds for every 30 seconds													
		Max. Output Frequency (Hz)	0.00 ~ 599.00													
		Carrier Frequency (kHz)	2 ~ 10 (default setting 6)				2 ~ 9 (default setting 4)									
	HEAVY DUTY	Rated Output Capacity (kVA)	55	69	84	114	136	167	197	235	280	348	417	466	517	677
		Rated Output Current (A)	69	86	105	143	171	209	247	295	352	437	523	585	649	815
		Applicable Motor Output (kW)	30	37	45	55	75	90	110	132	160	185	220	280	315	355
		Applicable Motor Output (HP)	40	53	60	75	100	125	150	175	215	250	300	375	425	475
		Overload Capacity	150% of rated current: 1 minute for every 5 minutes; 180% of rated current: 3 seconds for every 30 seconds													
		Max. Output Frequency (Hz)	0.00 ~ 300.00													
		Carrier Frequency (kHz)	2 ~ 6 (default setting 2)													
Input Rating	Input Current (A)	Normal Duty	74	101	114	157	167	207	240	300	380	400	494	555	625	866
		Heavy Duty	70	96	108	149	159	197	228	285	361	380	469	527	594	815
	Rated Voltage / Frequency		3 - phase AC 380 V ~ 480 V (-15% ~ +10%), 50 / 60 Hz													
	Operating Voltage Range		323 ~ 528 V_{AC}													
	Frequency Tolerance		47 ~ 63 Hz													
Drive Weight (Kg)			27 ± 1.5		38.5 ± 1.5		64.8 ± 1.5		86.5 ± 1.5		134 ± 4		228			
Efficiency (%)			97.8				98.2									
Power Factor			> 0.98													
Cooling Method			Fan cooling													
Braking Chopper			Frame A, B, C: built-in; Frame D and above: optional													
DC Choke			Frame A, B, C: optional; Frame D and above: built-in													
EMC Filter			Frame D0~H: Optional													
EMC-COP01			VFDXXXC43A: optional; VFDXXC43E: built-in													

*** The factory setting is Normal Duty mode**

NOTES

1) The carrier frequency is default. Increasing the carrier frequency requires a reduction in current. please refer to Pr. 06-55 Derating Protection drawing.
2) The AC motor drive should operate in derating current when its control method is set to FOC Sensorless, TQC+PG, TQC sensorless. PM+PG, PM sensorless. Please refer to Pr. 06-55 for more information.
3) Select the AC motor drive with capacity one grade larger for the impact load application.
4) The rated input current will be affected not only by Power Transformer and the connection of the reactors on input side, but also fluctuates with the impedance of power side.
5) For Frame A, B and C, Model VFDXXXC43A is under IP20 / NEMA1 / UL TYPE1 protection level.
6) For Frame D and above, if the last character of the model is A then it is under IP20 protection level but the wiring terminal is under IP00 protection level;
7) if the last character of the model is E, it is under IP20 / NEMA1 / UL TYPE1 protection level.

575V

Frame Size			A			B			
Model VFD-□□□C53A-21			015	022	037	055	075	110	150
Output *	Light Duty	Rated Output Capacity (kVA)	3	4.3	6.7	9.9	12.1	18.7	24.1
		Rated Output Current (A)	3	4.3	6.7	9.9	12.1	18.7	24.2
		Applicable Motor Output (kW)	1.5	2.2	3.7	5.5	7.5	11	15
		Applicable Motor Output (HP)	2	3	5	7.5	10	15	20
	Normal Duty	Rated Output Capacity (kVA)	2.5	3.6	5.5	8.2	10	15.4	19.9
		Rated Output Current (A)	2.5	3.6	5.5	8.2	10	15.5	20
		Applicable Motor Output (kW)	0.75	1.5	2.2	3.7	5.5	7.5	11
		Applicable Motor Output (HP)	1	2	3	5	7.5	10	15
	Heavy Duty	Rated Output Capacity (kVA)	2.1	3	4.6	6.9	8.3	12.9	16.7
		Rated Output Current (A)	2.1	3	4.6	6.9	8.3	13	16.8
		Applicable Motor Output (kW)	0.75	1.5	2.2	3.7	3.7	7.5	7.5
		Applicable Motor Output (HP)	1	2	3	5	5	10	10
	Carrier Frequency (kHz)		2~15 (default setting 4)						
Input	Input Current (A)	Light Duty	3.8	5.4	10.4	14.9	16.9	21.3	26.3
		Normal Duty	3.1	4.5	7.2	12.3	15	18	22.8
		Heavy Duty	2.6	3.8	5.8	10.7	12.5	16.9	19.7
	Rated Voltage/Frequency		3-Phase 525 V_{AC}~600 V_{AC} (-15%~+10%), 50/60 Hz						
	Operating Voltage Range		446~660 V_{AC}						
	Frequency Tolerance		47~63 Hz						
Efficiency (%)			97			98			
Power Factor			>0.98						
AC Drive Weight (Kg)			3±0.3			4.8±1			
Cooling Method			Natural cooling		Fan cooling				
Braking Chopper			Built-in						
DC Choke			Optional						
EMC Filter			Optional						

690V

Frame Size			C				D		E			
Model VFD-□□□C63B-00 / -21			185	220	300	370	450	550	750	900	1100	1320
Output *	Light Duty	Rated Output Capacity (kVA)	29	36	43	54	65	80	103	124	149	179
		Applicable Motor Output (690V, kW)	18.5	22	30	37	45	55	75	90	110	132
		Applicable Motor Output (690V, HP)	25	30	40	50	60	75	100	125	150	175
		Applicable Motor Output (575V, HP)	20	25	30	40	50	60	75	100	125	150
		Rated Output Current (A)	24	30	36	45	54	67	86	104	125	150
	Normal Duty	Rated Output Capacity (kVA)	24	29	36	43	54	65	80	103	124	149
		Applicable Motor Output (690V, kW)	15	18.5	22	30	37	45	55	75	90	110
		Applicable Motor Output (690V, HP)	20	25	30	40	50	60	75	100	125	150
		Applicable Motor Output (575V, HP)	15	20	25	30	40	50	60	75	100	125
		Rated Output Current (A)	20	24	30	36	45	54	67	86	104	125
	Heavy Duty	Rated Output Capacity (kVA)	17	24	29	36	43	54	65	80	103	124
		Applicable Motor Output (690V, kW)	11	15	18.5	22	30	37	45	55	75	90
		Applicable Motor Output (690V, HP)	15	20	25	30	40	50	60	75	100	125
		Applicable Motor Output (575V, HP)	10	15	20	25	30	40	50	60	75	100
		Rated Output Current (A)	14	20	24	30	36	45	54	67	86	104
	Carrier Frequency (kHz)		2~9 (default setting 4)									
Input	Input Current (A)	Light Duty	29	36	43	54	65	81	84	102	122	147
		Normal Duty	24	29	36	43	54	65	66	84	102	122
		Heavy Duty	20	24	29	36	43	54	53	66	84	102
	Rated Voltage/Frequency		3-Phase 525 V_{AC}~690 V_{AC} (-15%~+10%), 50/60 Hz									
	Operating Voltage Range		446~759 V_{AC}									
	Frequency Tolerance		47~63 Hz									
Efficiency (%)			97									
Power Factor			>0.98									
AC Drive Weight (Kg)			10±1.5				39±1.5			61±1.5		
Cooling Method			Fan cooling									
Braking Chopper			Frame C (built-in)				Frame D and above (optional)					
DC Choke			Frame C (optional)				Frame D and above (built-in)					
EMC Filter			Optional									

* Parameter 00-16; available load modes: Light Duty (LD), Normal Duty (ND) and Heavy Duty (HD); default setting is LD mode

690 V										
Frame Size			F		G		H			
Model VFD-□□□C63B-00 / -21			1600	2000	2500	3150	4000	4500	5600	6300
Output *	Light Duty	Rated Output Capacity (kVA)	215	263	347	418	494.5	534.7	678.5	776
		Applicable Motor Output (690V, kW)	160	200	250	315	400	450	560	630
		Applicable Motor Output (690V, HP)	215	270	335	425	530	600	745	850
		Applicable Motor Output (575V, HP)	175	200	250	350	400	450	500	745
		Rated Output Current (A)	180	220	290	350	430	465	590	675
	Normal Duty	Rated Output Capacity (kVA)	179	215	239	347	402.5	442.7	534.7	776
		Applicable Motor Output (690V, kW)	132	160	200	250	315	355	450	630
		Applicable Motor Output (690V, HP)	175	215	270	335	425	475	600	850
		Applicable Motor Output (575V, HP)	150	175	200	250	350	400	450	745
		Rated Output Current (A)	150	180	220	290	350	385	465	675
	Heavy Duty	Rated Output Capacity (kVA)	149	179	215	263	333.5	356.5	483	776
		Applicable Motor Output (690V, kW)	110	132	160	200	250	280	400	630
		Applicable Motor Output (690V, HP)	150	175	215	270	335	375	530	850
		Applicable Motor Output (575V, HP)	125	150	175	200	250	335	450	745
		Rated Output Current (A)	125	150	180	220	290	310	420	675
	Carrier Frequency (kHz)		2~9 (default setting 4)							2~9 (default setting 3)
Input	Input Current (A)	Light Duty	178	217	292	353	454	469	595	681
		Normal Duty	148	178	222	292	353	388	504	681
		Heavy Duty	123	148	181	222	292	313	423	681
	Rated Voltage / Frequency		3-Phase 525 V_{AC} ~ 690 V_{AC} (-15% ~ +10%), 50 / 60 Hz							
	Operating Voltage Range		446 ~ 759 V_{AC}							
	Frequency Tolerance		47 ~ 63 Hz							
Efficiency (%)			97		98					
Power Factor			> 0.98							
AC Drive Weight (Kg)			88 ± 1.5		135 ± 4		243 ± 5			
Cooling Method			Fan cooling							
Braking Chopper			Frame D and above (optional)							
DC Choke			Frame D and above (built-in)							
EMC Filter			Optional							

* Parameter 00-16; available load modes: Light Duty (LD), Normal Duty (ND) and Heavy Duty (HD); default setting is LD mode

General Specifications

Control Characteristics	**Control Method**	Pulse Width Modulated (PWM)
	Control Mode	230 V / 460 V model: 1: V / F · 2: SVC · 3: VF+PG · 4: FOC+PG · 5: TQC+PG · 6: PM+PG · 7: FOC sensorless · 8: TQC sensorless · 9: PM sensorless
		575 V / 690 V model: 1: V/F · 2: V/F+PG · 3: SVC
	Starting Torque	Reach up to 150% or above at 0.5 Hz. Under FOC+PG mode, starting torque can reach 150% at 0 Hz
	V/F Curve	4-point adjustable V/F curve and square curve
	Speed Response Ability	5 Hz (vector control can reach up to 40 Hz)
	Torque Limit	230 V / 460 V model: Normal duty 160%, heavy duty 180% of torque current ; 575 V / 690 V model: Maximum 200% of torque current
	Torque Accuracy at TQC Mode	TQC + PG : ±5% TQC Sensorless : ±15%
	Max. Output Frequency (Hz)	Light Duty / Normal duty: 0.01 ~ 599.00 Hz; Heavy duty: 0.00 ~ 300.00 Hz
	Frequency Output Accuracy	Digital command: ±0.01%, -10° C ~ +40° C, Analog command: ±0.1%, 25 ±10° C
	Output Frequency Resolution	Digital command: 0.01 Hz, Analog command: 0.03 * max. output frequency / 60 Hz (±11 bit)
	Overload Capacity	230 V / 460 V model: Normal duty: 120% of rated current can endure for 1 minute during every 5 minutes ; 160% of rated current can endure for 3 seconds during every 30 seconds Heavy duty: 150% of rated current can endure for 1 minute during every 5 minutes ; 180% of rated current can endure for 3 seconds during every 30 seconds
		575 V / 690 V model: Light duty: 120% of rated current can endure for 1 minute Normal duty: 120% of rated current can endure for 1 minute, 150% can endure for 3 seconds Heavy duty: 150% of rated current can endure for 1 minute, 180% can endure for 3 seconds
	Frequency Setting Signal	+10 V ~ -10V, 0 ~ +10 V, 4 ~ 20 mA, 0 ~ 20 mA, pulse input
	Accel. / decel. Time	0.00 ~ 600.00 / 0.0 ~ 6000.0 Seconds
	Main Control Function	Torque control, Speed / torque control switching, Feed forward control, Zero-servo control, Momentary power loss ride thru, Speed search, Over-torque detection, Torque Limit, 16-step speed (Max.), Accel / decel time switch, S-curve accel / decel, 3-wire sequence, Auto-Tuning (rotational, stationary), Dwell, Slip compensation, Torque compensation, JOG frequency, Fault restart, Frequency upper / lower limit settings, DC injection braking at start / stop, High slip braking, Parameter copy PID control (with sleep function), Energy saving control, MODOBUS communication (RS-485 RJ45, Max. 115.2 kbps)
	Fan Control	230 V model: VFD150C23A (include) and series above: PMW control; VFD110C23A and below: on / off switch control 460 V model: VFD185C43A (include) and series above: PMW control; VFD150C43A and below: on / off switch control 575 V / 690 V model: PWM control
Protection Characteristics	**Motor Protection**	Electronic thermal relay protection
	Over-current Protection	230 V / 460 V model: Over-current protection for 240% of rated current (Normal duty) Current clamp (Normal duty: around 170 ~ 175%); (Heavy duty: around 180 ~ 185%)
		575 V / 690 V model: Over-current protection for 225% rated current (Normal duty) Current clamp (Light duty: around 128 ~ 141%); (Normal duty: around 170 ~ 175%); (Heavy duty: around 202% ~ 210%)
	Over-Voltage Protection	The C2000 Series will shut down under below conditions: 230 V: DC bus over 410 V; 460 V: DC bus over 820 V; 575 V / 690 V: DC bus over 1189 V
	Over-Temperature Protection	Built-in temperature sensor
	Stall Prevention	Stall prevention during acceleration, deceleration and running independently
	Restart after Instantaneous Power Failure	Parameter setting up to 20 seconds
	Grounding Leakage Current Protection	Leakage current is higher than 50% of rated current of the AC motor drive
	Short-circuit Current Rating (SCCR)	Per UL508C, the drive is suitable for use on a circuit capable of delivering not more than 100kA symmetrical amperes (rms) when protected by fuses given in the fuse table
International Certifications		CE UL EAC

Note: EAC Certification is for 230V and 460V models only

Wiring

Wiring Diagram for Frame A ~ C

*Input: 3-phase power

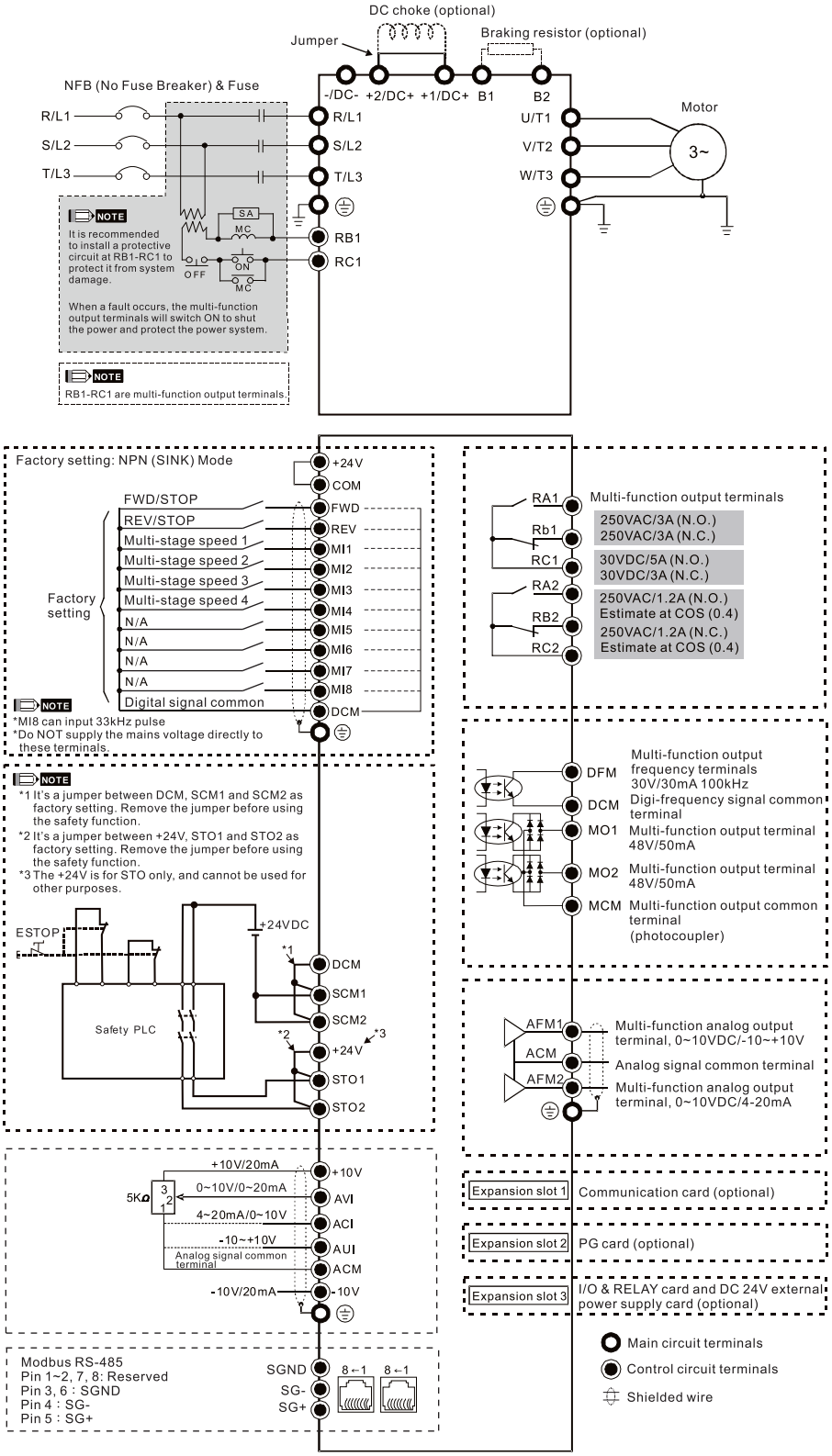

NOTE

It is not recommended to use a power capacitor or automatic power factor regulator (APFR) at the power input side. If the system requires such a device, please make sure a reactor is installed between the drive and the power capacitor or APFR.

Wiring Diagram for Frame D ~ F

*Input: 3-phase power

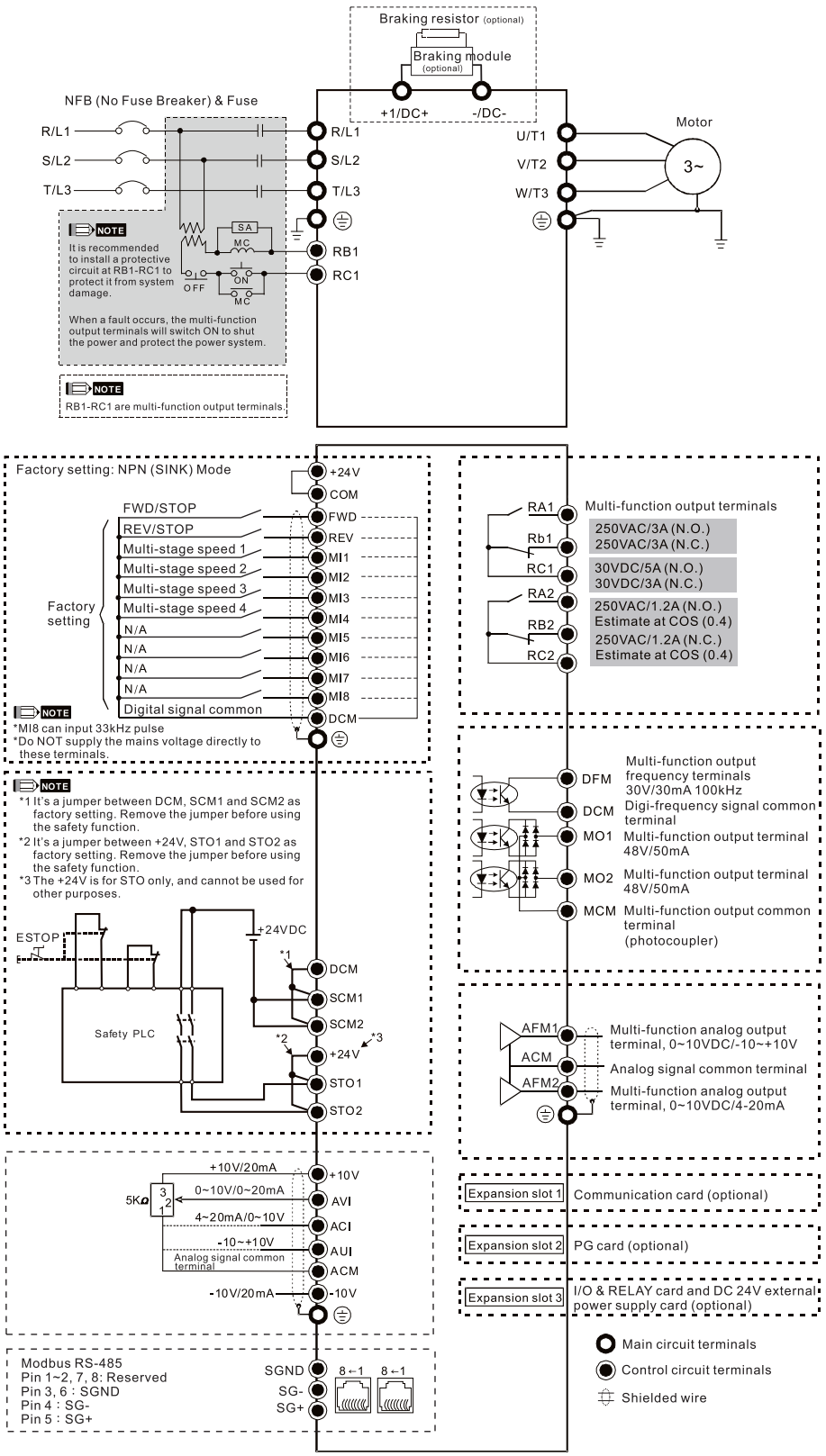

Wiring Diagram for Frame G ~ H

*Input: 3-phase power

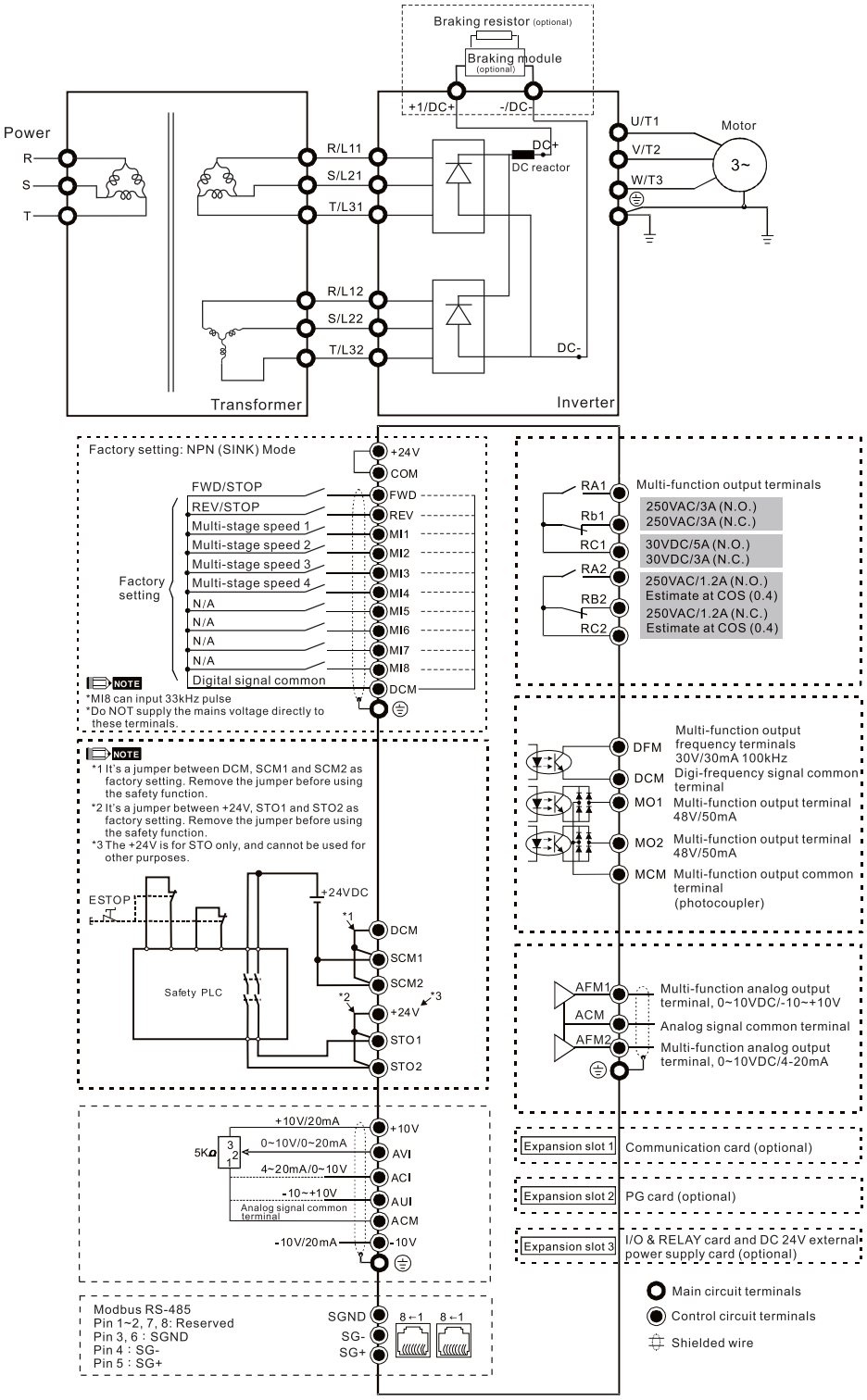

NOTE

It is not recommended to use a power capacitor or automatic power factor regulator (APFR) at the power input side. If the system requires such a device, please make sure a reactor is installed between the drive and the power capacitor or APFR.

Dimensions

Digital Keypad Unit: mm [inch]

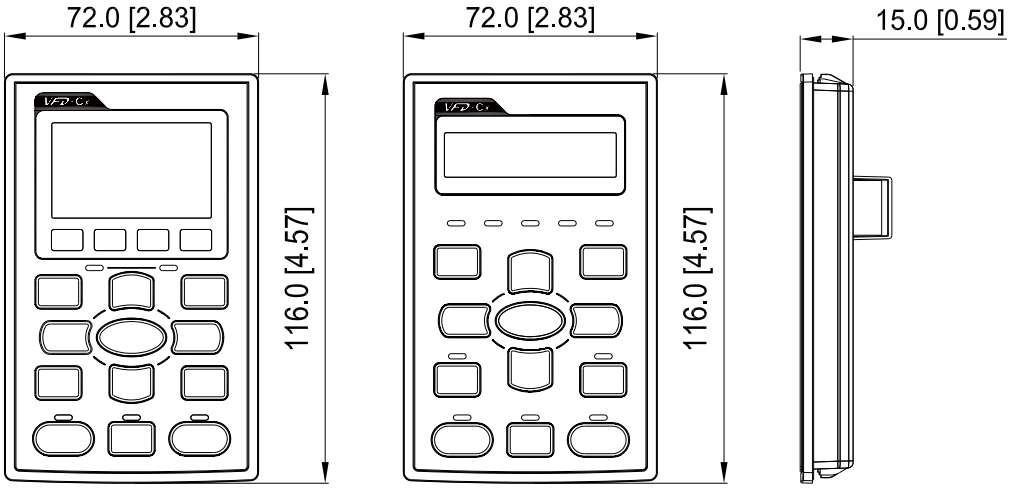

KPC-CC01 KPC-CE01

Frame A

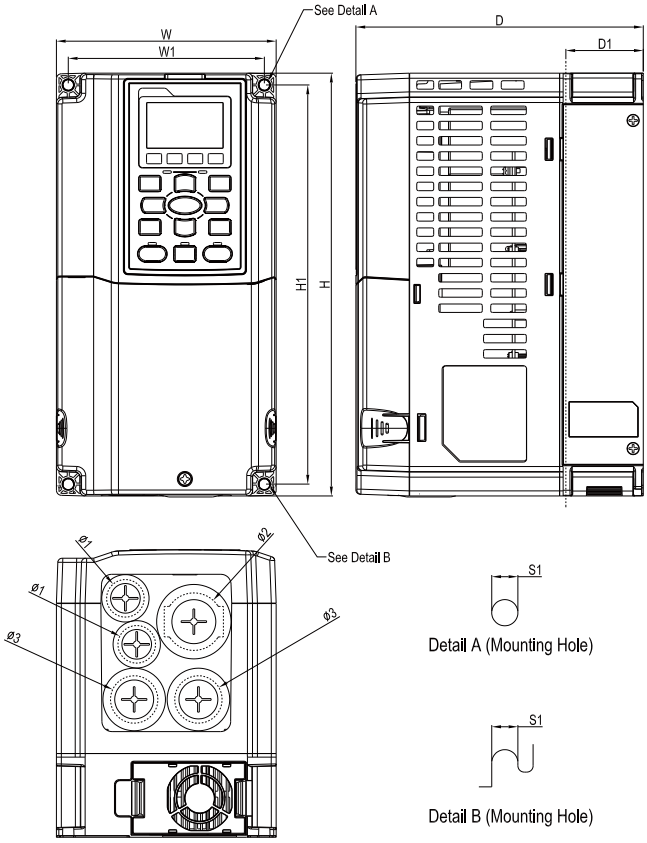

MODEL FRAME_A
VFD007C23A
VFD015C23A
VFD022C23A
VFD037C23A
VFD007C43A / 43E
VFD015C43A / 43E
VFD022C43A / 43E
VFD037C43A / 43E
VFD040C43A / 43E
VFD055C43A / 43E
VFD015C53A-21
VFD022C53A-21
VFD037C53A-21

Frame		W	H	D	W1	H1	D1*	Ø	Ø1	Ø2	Ø3
A1	mm	130.0	250.0	170.0	116.0	236.0	45.8	6.2	22.2	34.0	28.0
	inch	5.12	9.84	6.69	4.57	9.29	1.80	0.24	0.87	1.34	1.10

*D1: Flange mount.

Frame B

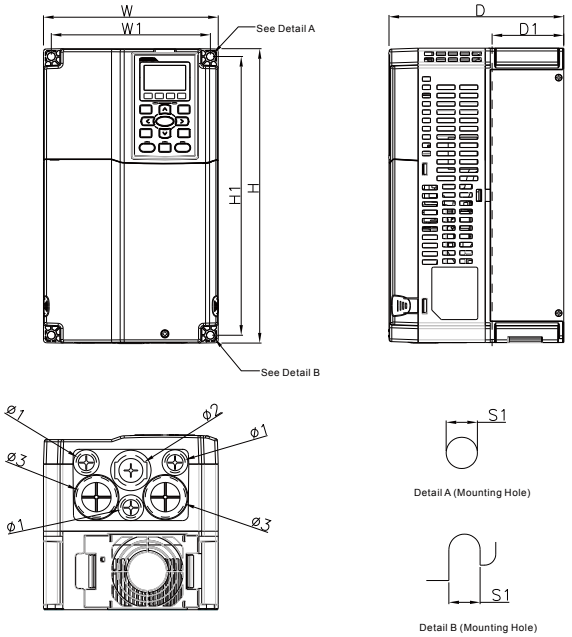

MODEL

VFD055C23A
VFD075C23A
VFD110C23A
VFD075C43A / 43E
VFD110C43A / 43E
VFD150C43A / 43E
VFD055C53A-21
VFD075C53A-21
VFD110C53A-21
VFD150C53A-21

Frame		W	H	D	W1	H1	D1*	S1	Ø1	Ø2	Ø3
B1	mm	190.0	320.0	190.0	173.0	303.0	77.9	8.5	22.2	34.0	28.0
	inch	7.48	12.60	7.48	6.81	11.93	3.07	0.33	0.87	1.34	1.10

*D1: Flange mount.

Frame C

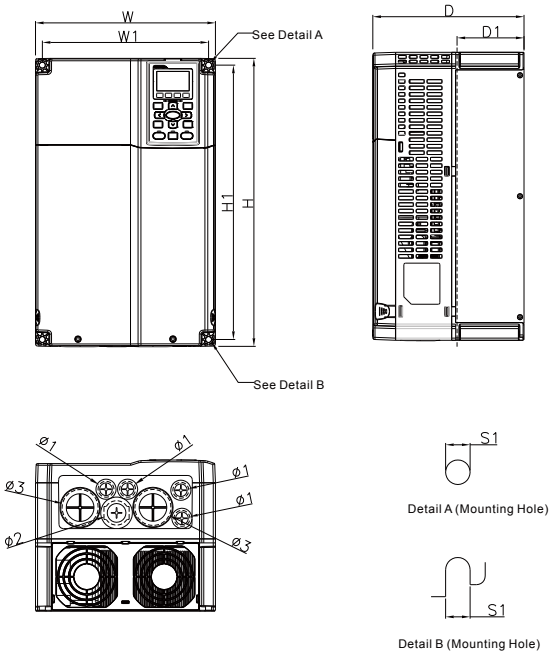

MODEL

VFD150C23A
VFD185C23A
VFD220C23A
VFD185C43A / 43E
VFD220C43A / 43E
VFD300C43A / 43E
VFD185C63B-21
VFD220C63B-21
VFD300C63B-21
VFD370C63B-21

Frame		W	H	D	W1	H1	D1*	S1	Ø1	Ø2	Ø3
C1	mm	250.0	400.0	210.0	231.0	381.0	92.9	8.5	22.2	34.0	50.0
	inch	9.84	15.75	8.27	9.09	15.00	3.66	0.33	0.87	1.34	1.97

*D1: Flange mount.

Frame D

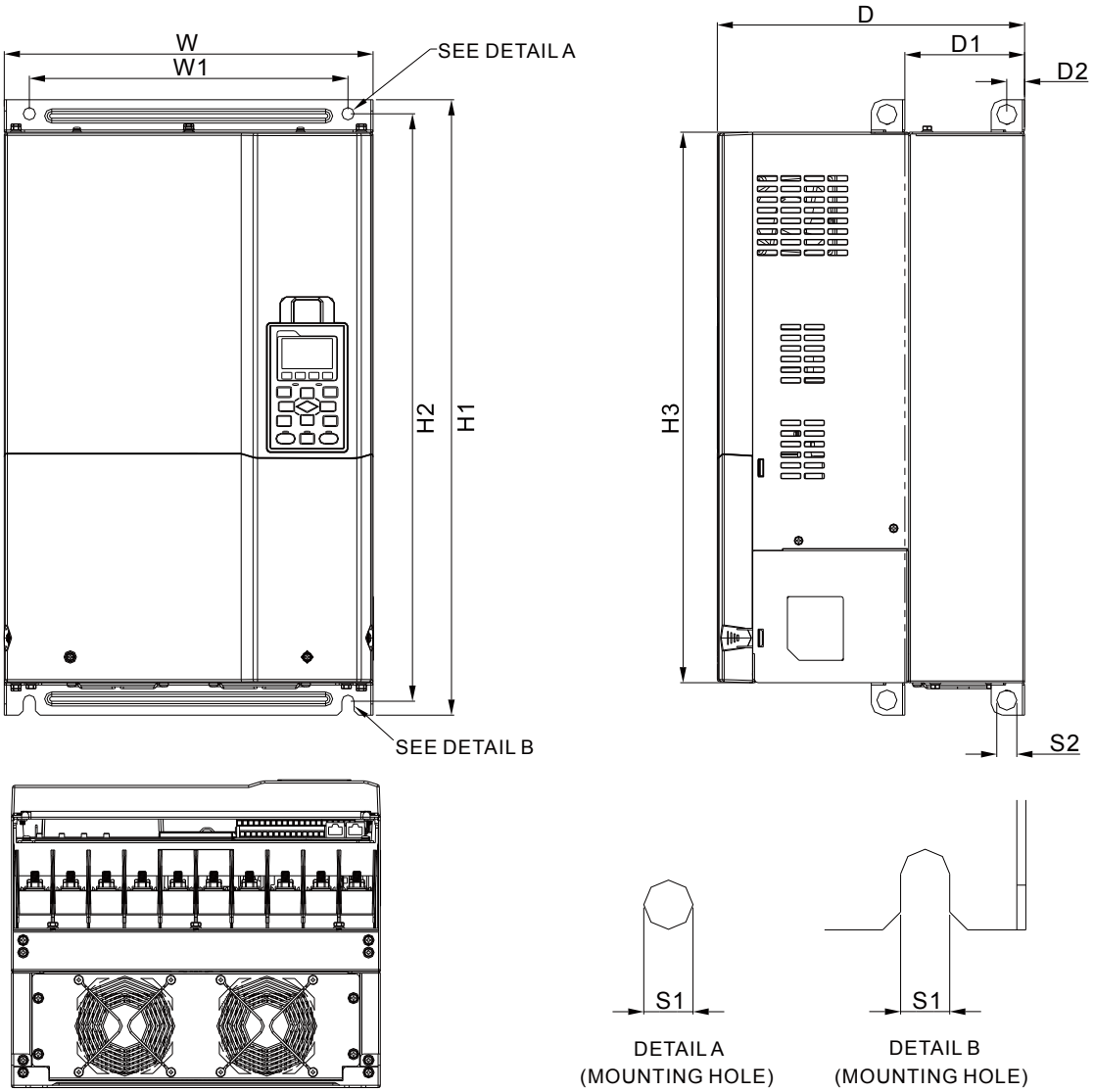

MODEL FRAME_D1	FRAME_D0-1
VFD300C23A	VFD370C43S
VFD370C23A	VFD450C43S
VFD550C43A	
VFD750C43A	
VFD450C63B-00	
VFD550C63B-00	

Frame		W	H	D	W1	H1	H2	H3	D1*	D2	S1	S2	Ø1	Ø2	Ø3
D1	mm	330.0	-	275.0	285.0	550.0	525.0	492.0	107.2	16.0	11.0	18.0	-	-	-
	inch	12.99	-	10.83	11.22	21.65	20.67	19.37	4.22	0.63	0.43	0.71	-	-	-
Frame		W	H	D	W1	H1	H2	H3	D1*	D2	S1	S2			
D0-1	mm	280.0	-	255.0	235.0	500.0	475.0	442.0	94.2	16.0	11.0	18.0			
	inch	11.02	-	10.04	9.25	19.69	18.70	17.40	3.71	0.63	0.43	0.71			

*D1: Flange mount.

Frame D

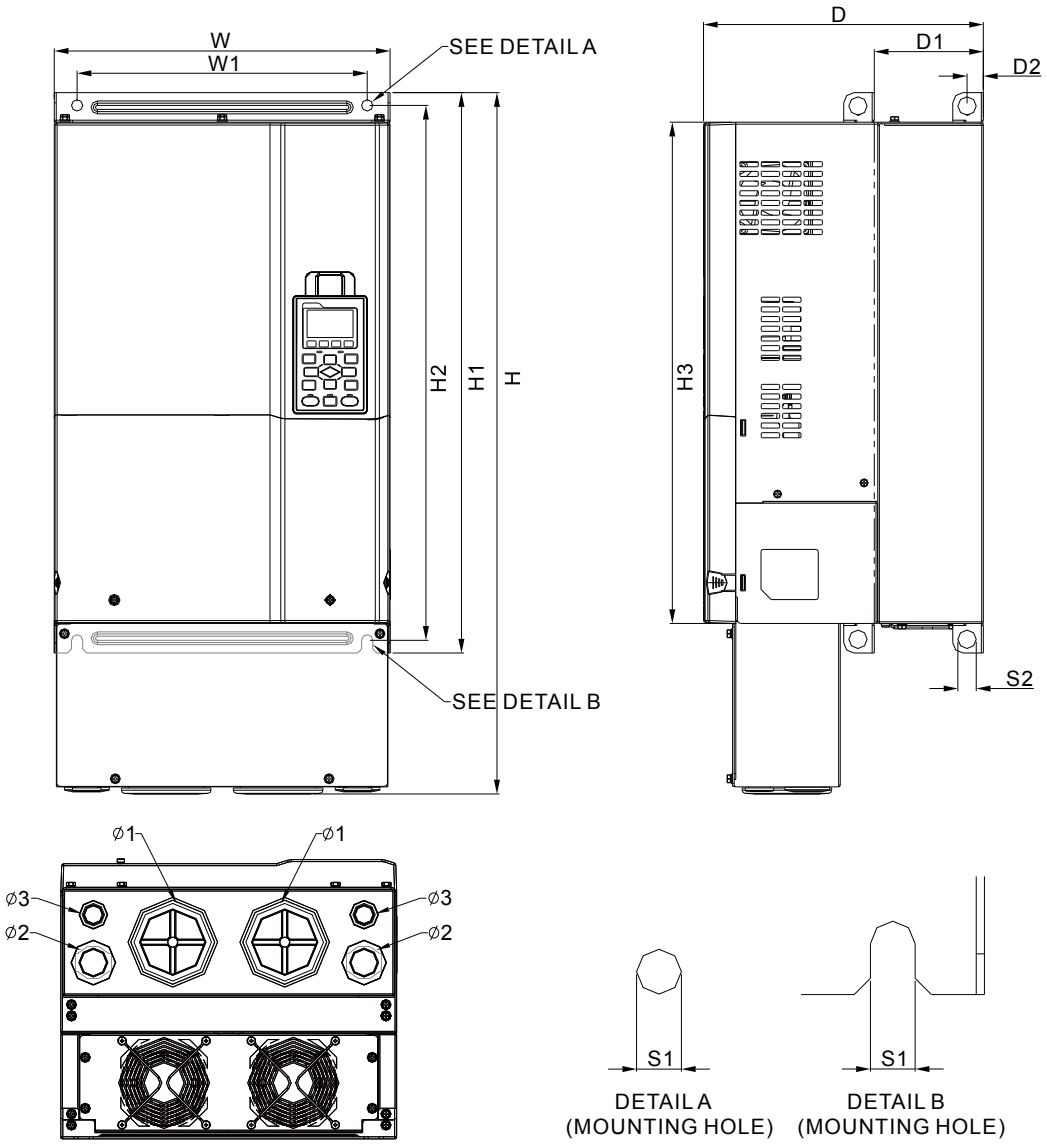

MODEL FRAME_D2	FRAME_D0-2
VFD300C23E	VFD370C43U
VFD370C23E	VFD450C43U
VFD550C43E	
VFD750C43E	
VFD450C63B-21	
VFD550C63B-21	

Frame		W	H	D	W1	H1	H2	H3	D1*	D2	S1	S2	Ø1	Ø2	Ø3
D2	mm	330.0	688.3	275.0	285.0	550.0	525.0	492.0	107.2	16.0	11.0	18.0	76.2	34.0	22.0
	inch	12.99	27.10	10.83	11.22	21.65	20.67	19.37	4.22	0.63	0.43	0.71	3.00	1.34	0.87
Frame		W	H	D	W1	H1	H2	H3	D1*	D2	S1	S2	Ø1	Ø2	Ø3
D0-2	mm	280.0	614.4	255.0	235.0	500.0	475.0	442.0	94.2	16.0	11.0	18.0	62.7	34.0	22.0
	inch	11.02	21.19	10.04	9.25	19.69	18.70	17.40	3.71	0.63	0.43	0.71	2.47	1.34	0.87

*D1: Flange mount.

Frame E

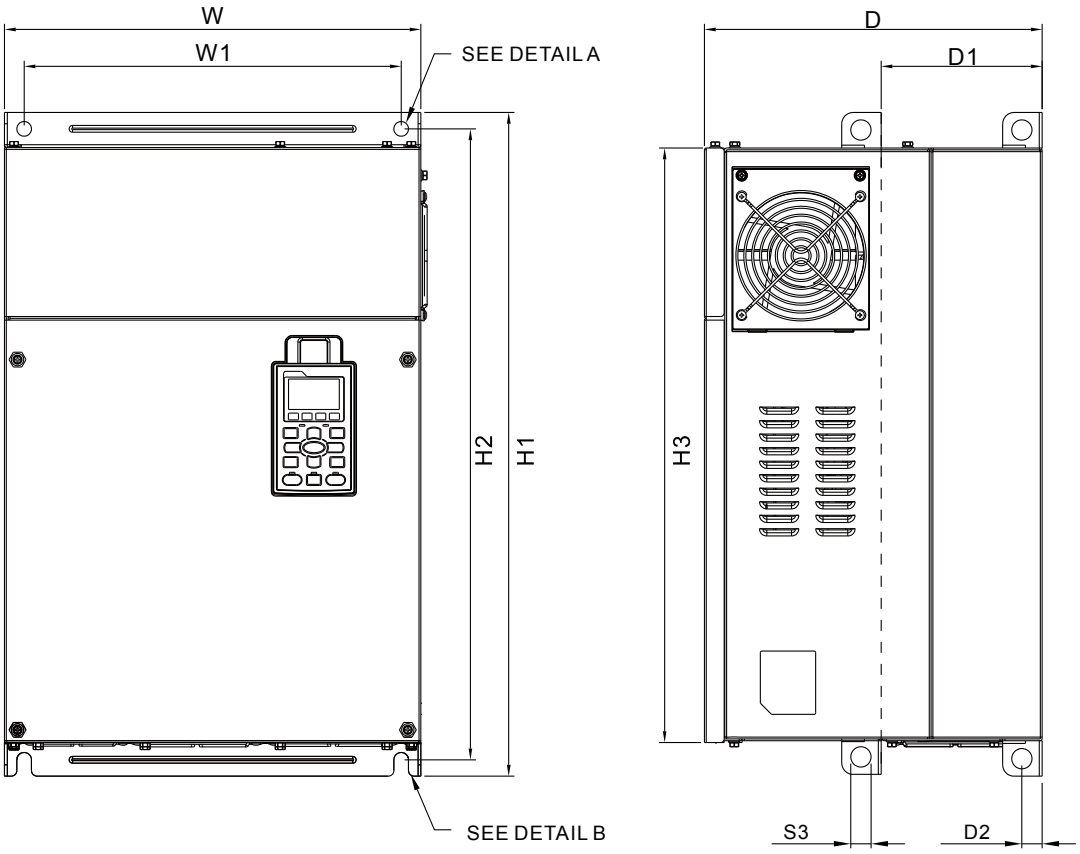

MODEL FRAME_E1	
VFD450C23A	VFD750C63B-00
VFD550C23A	VFD900C63B-00
VFD750C23A	VFD1100C63B-00
VFD900C43A	VFD1320C63B-00
VFD1100C43A	

Frame		W	H	D	W1	H1	H2	H3	D1*	D2	S1	S2	S3	Ø1	Ø2	Ø3
E1	mm	370.0	-	300.0	335.0	589	560.0	528.0	143.0	18.0	13.0	13.0	18.0	-	-	-
	inch	14.57	-	11.81	13.19	23.19	22.05	20.80	5.63	0.71	0.51	0.51	0.71	-	-	-

*D1: Flange mount.

Frame E

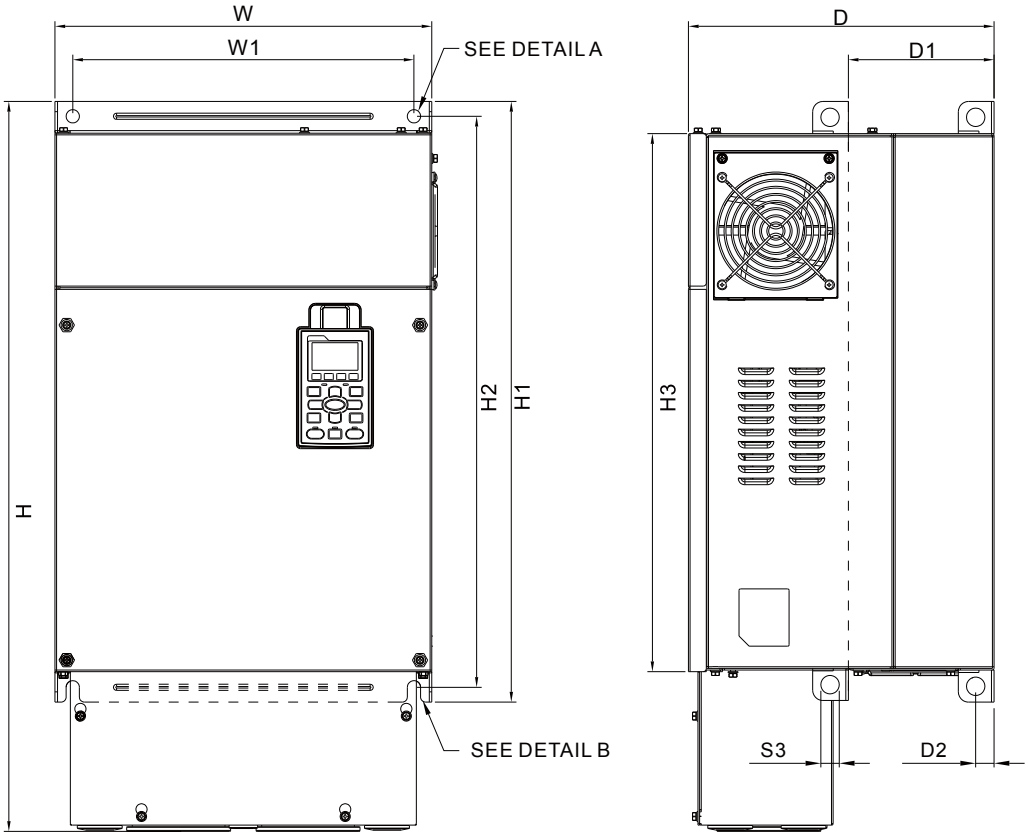

MODEL FRAME_E2	
VFD450C23E	VFD750C63B-21
VFD550C23E	VFD900C63B-21
VFD750C23E	VFD1100C63B-21
VFD900C43E	VFD1320C63B-21
VFD1100C43E	

Frame		W	H	D	W1	H1	H2	H3	D1*	D2	S1	S2	S3	Ø1	Ø2	Ø3
E2	mm	370.0	715.8	300.0	335.0	589.0	560.0	528.0	143.0	18.0	13.0	13.0	18.0	22.0	34.0	92.0
	inch	14.57	28.18	11.81	13.19	23.19	22.05	20.80	5.63	0.71	0.51	0.51	0.71	0.87	1.34	3.62

*D1: Flange mount.

Frame F

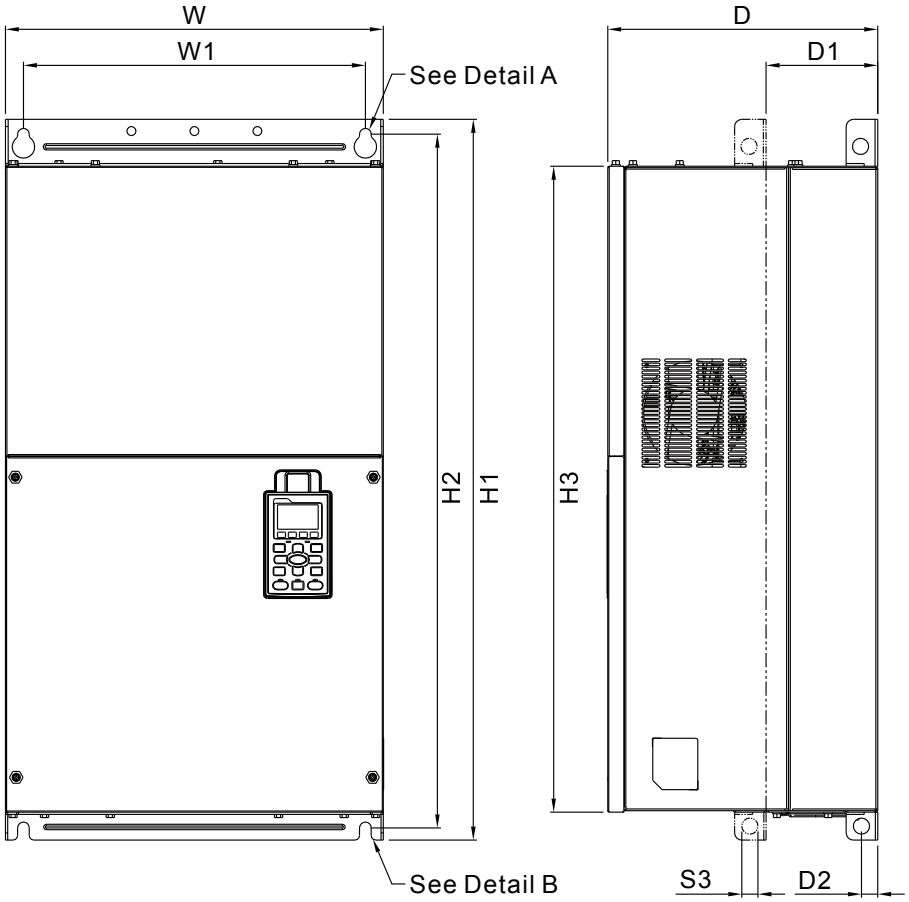

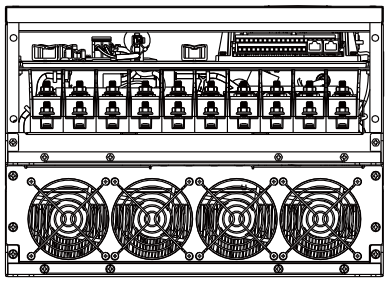

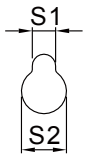

Detail A (Mounting Hole)

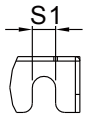

Detail B (Mounting Hole)

MODEL FRAME_F1
VFD900C23A
VFD1320C43A
VFD1600C43A
VFD1600C63B-00
VFD2000C63B-00

Frame		W	H	D	W1	H1	H2	H3	D1*	D2	S1	S2	S3	Ø1	Ø2	Ø3
F1	mm	420.0	-	300.0	380.0	800.0	770.0	717.0	124.0	18.0	13.0	25.0	18.0	92.0	35.0	22.0
	inch	16.54	-	11.81	14.96	31.50	30.32	28.23	4.88	0.71	0.51	0.98	0.71	3.62	1.38	0.87

*D1: Flange mount.

Frame F

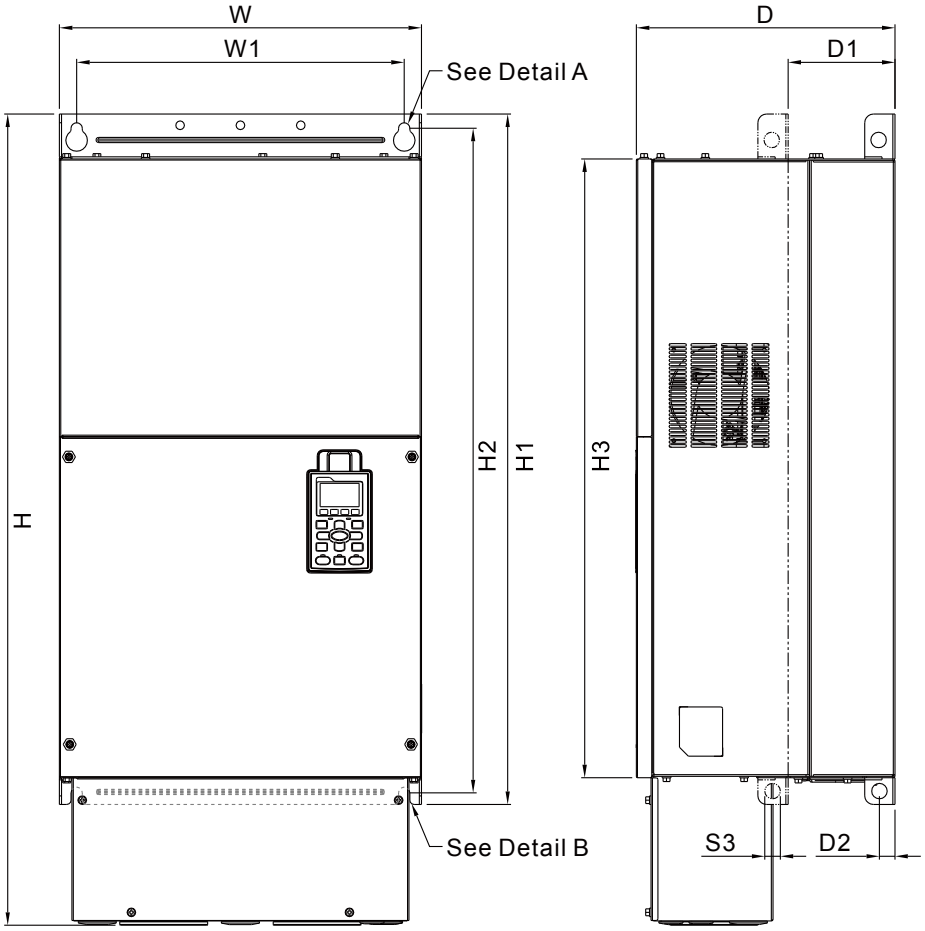

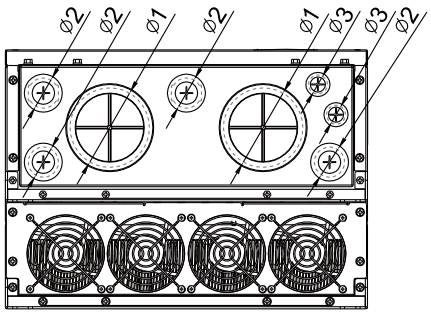

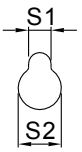

Detail A (Mounting Hole)

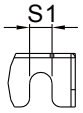

Detail B (Mounting Hole)

MODEL
FRAME_F2

VFD900C23E
VFD1320C43E
VFD1600C43E
VFD1600C63B-21
VFD2000C63B-21

Frame		W	H	D	W1	H1	H2	H3	D1*	D2	S1	S2	S3	Ø1	Ø2	Ø3
F2	mm	420.0	940.0	300.0	380.0	800.0	770.0	717.0	124.0	18.0	13.0	25.0	18.0	92.0	35.0	22.0
	inch	16.54	37.00	11.81	14.96	31.50	30.32	28.23	4.88	0.71	0.51	0.98	0.71	3.62	1.38	0.87

*D1: Flange mount.

Frame G

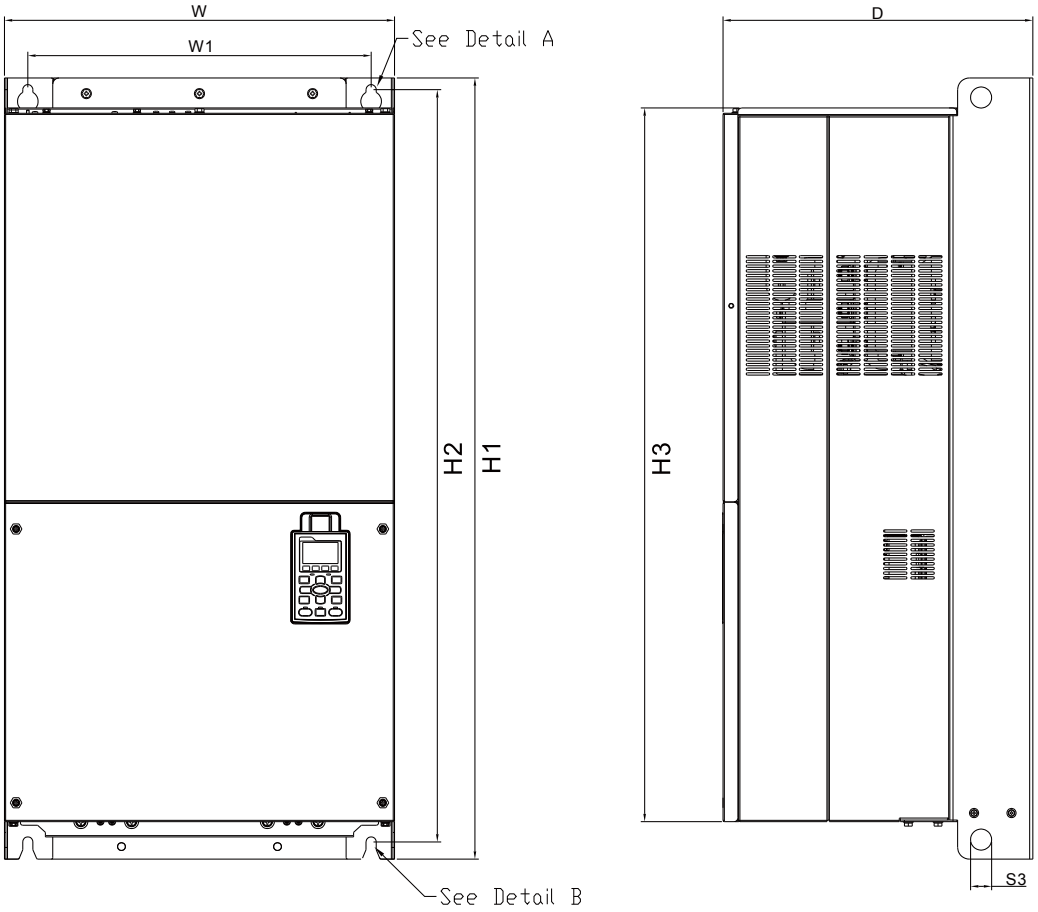

MODEL FRAME_G1
VFD1850C43A
VFD2200C43A
VFD2500C63B-00
VFD3150C63B-00

Frame		W	H	D	W1	H1	H2	H3	S1	S2	S3	Ø1	Ø2	Ø3
G1	mm	500.0	-	397.0	440.0	1000.0	963.0	913.6	13.0	26.5	27.0	-	-	-
	inch	19.69	-	15.63	217.32	39.37	37.91	35.97	0.51	1.04	1.06	-	-	-

Frame G

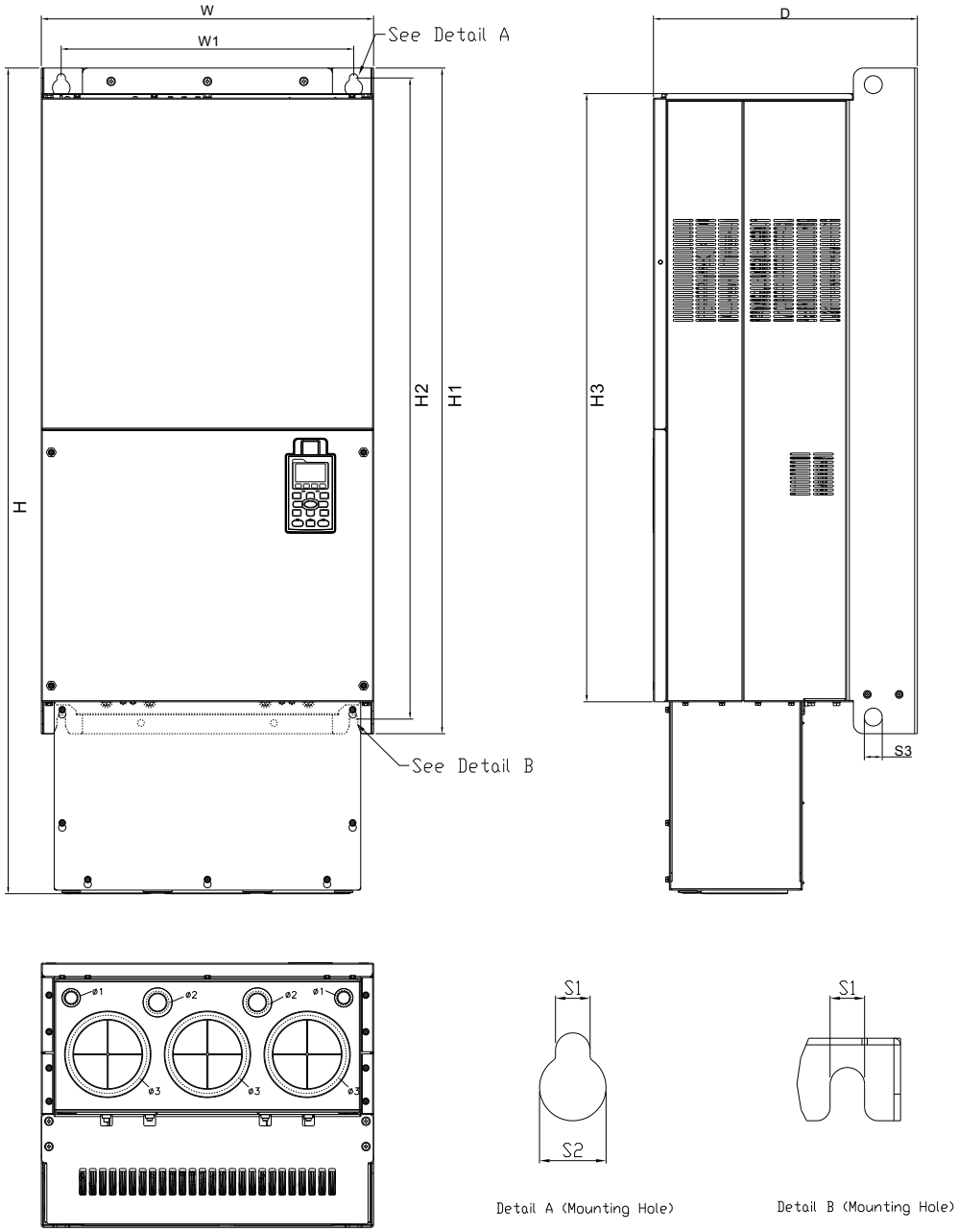

MODEL FRAME_G2
VFD1850C43E VFD2200C43E VFD2500C63B-21 VFD3150C63B-21

Frame		W	H	D	W1	H1	H2	H3	S1	S2	S3	Ø1	Ø2	Ø3
G2	mm	500.0	1240.2	397.0	440.0	1000.0	963.0	913.6	13.0	26.5	27.0	22.0	34.0	117.5
	inch	19.69	48.83	15.63	217.32	39.37	37.91	35.97	0.51	1.04	1.06	0.87	1.34	4.63

Frame H1

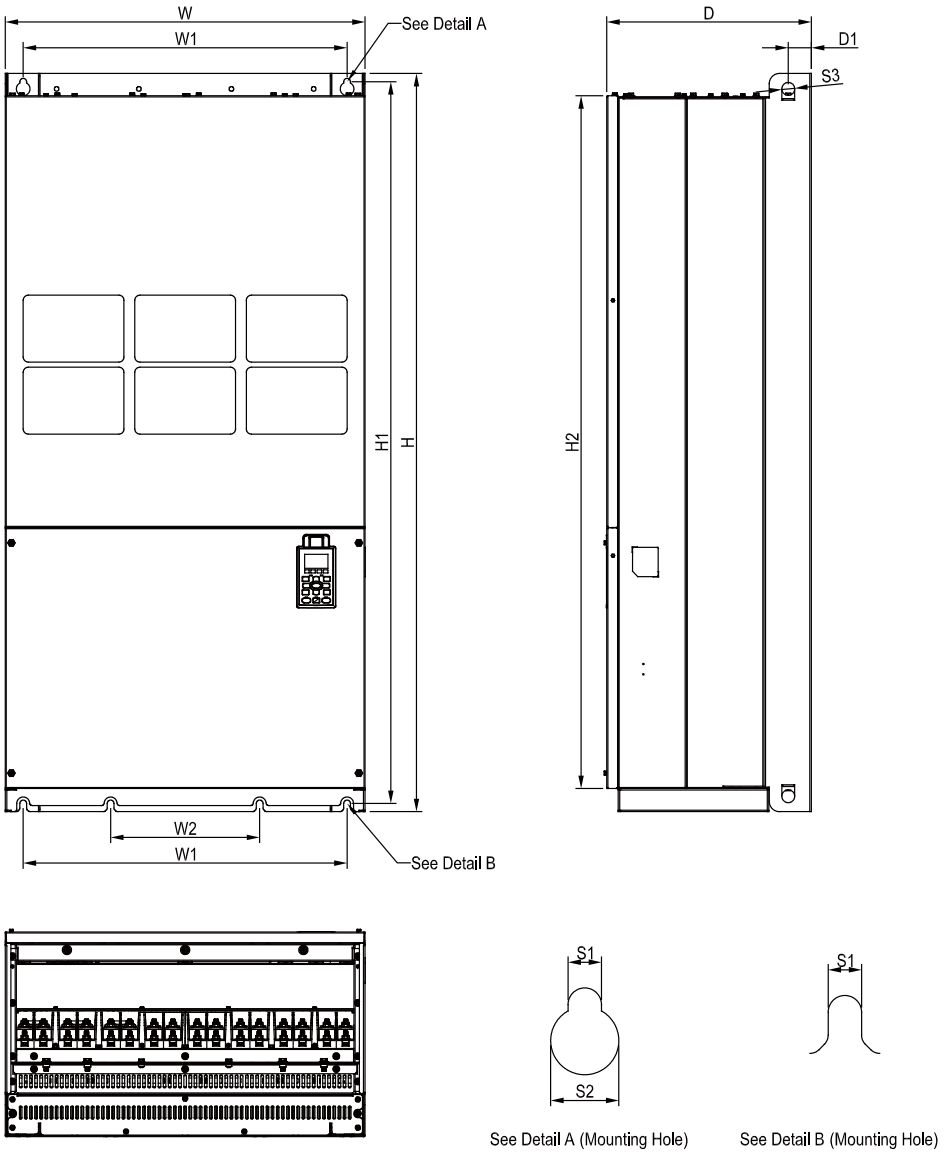

MODEL FRAME_H1
VFD2800C43A
VFD3150C43A
VFD3550C43A
VFD4500C43A

Frame		W	H	D	W1	W2	W3	W4	W5	W6	H1	H2	H3	H4
H1	mm	700.0	1435.0	398.0	630.0	290.0	-	-	-	-	1403.0	1346.6	-	-
	inch	27.56	56.50	15.67	24.80	11.42	-	-	-	-	55.24	53.02	-	-
Frame		**H5**	**D1**	**D2**	**D3**	**D4**	**D5**	**D6**	**S1**	**S2**	**S3**	**Ø1**	**Ø2**	**Ø3**
H1	mm	-	45.0	-	-	-	-	-	13.0	26.5	25.0	-	-	-
	inch	-	1.77	-	-	-	-	-	0.51	1.04	0.98	-	-	-

Frame H2

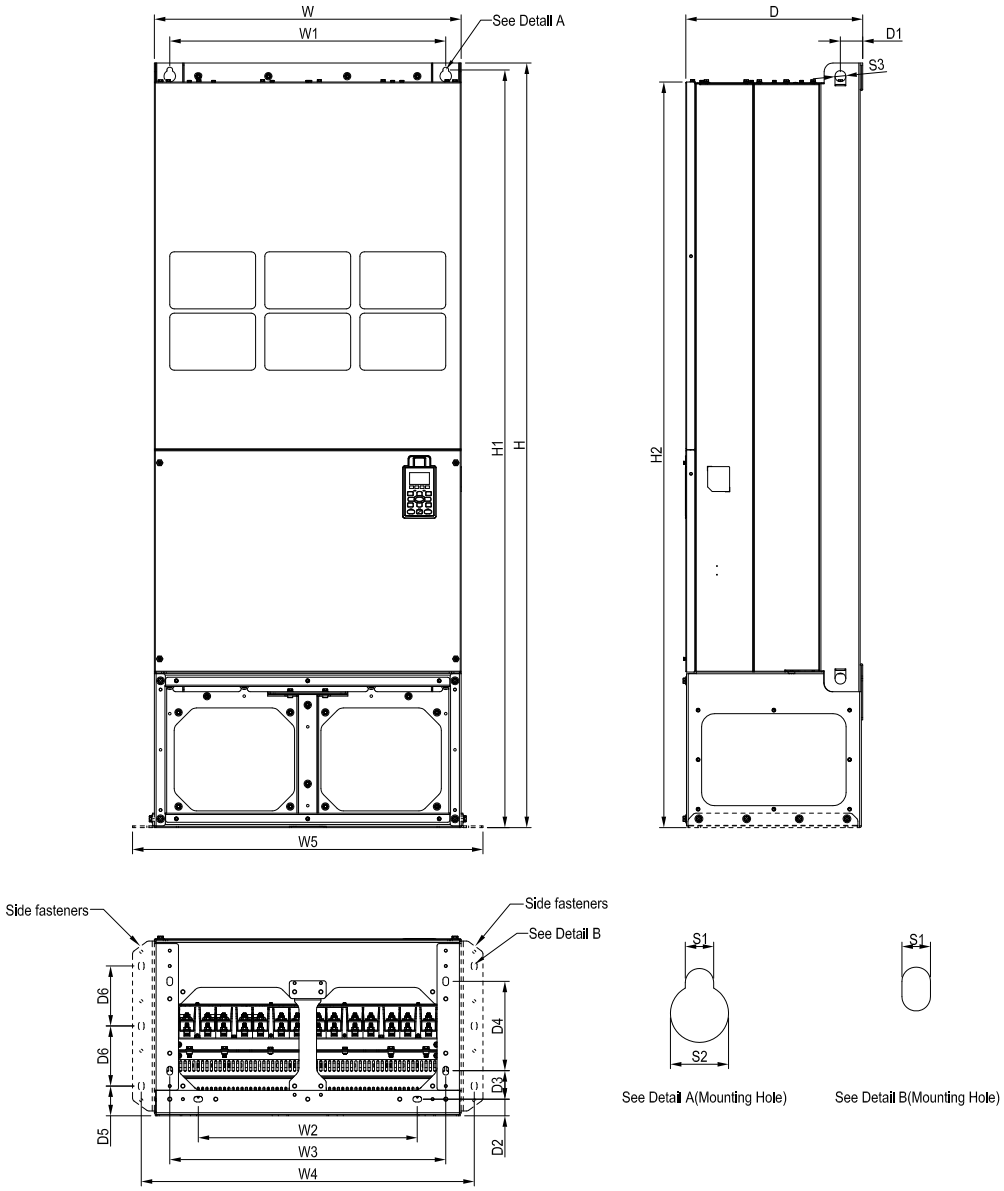

MODEL FRAME_H2
VFD2800C43E-1
VFD3150C43E-1
VFD3550C43E-1
VFD4500C43E-1

Frame		W	H	D	W1	W2	W3	W4	W5	W6	H1	H2	H3	H4
H2	mm	700.0	1745.0	404.0	630.0	500.0	630.0	760.0	800.0	-	1729.0	1701.6	-	-
	inch	27.56	68.70	15.9	24.80	19.69	24.80	29.92	31.50	-	68.07	66.99	-	-
Frame		**H5**	**D1**	**D2**	**D3**	**D4**	**D5**	**D6**	**S1**	**S2**	**S3**	**Ø1**	**Ø2**	**Ø3**
H2	mm	-	51.0	38.0	65.0	204.0	68.0	137.0	13.0	26.5	25.0	-	-	-
	inch	-	2.0	1.50	2.56	8.03	2.68	5.4	0.51	1.04	0.98	-	-	-

Frame H3

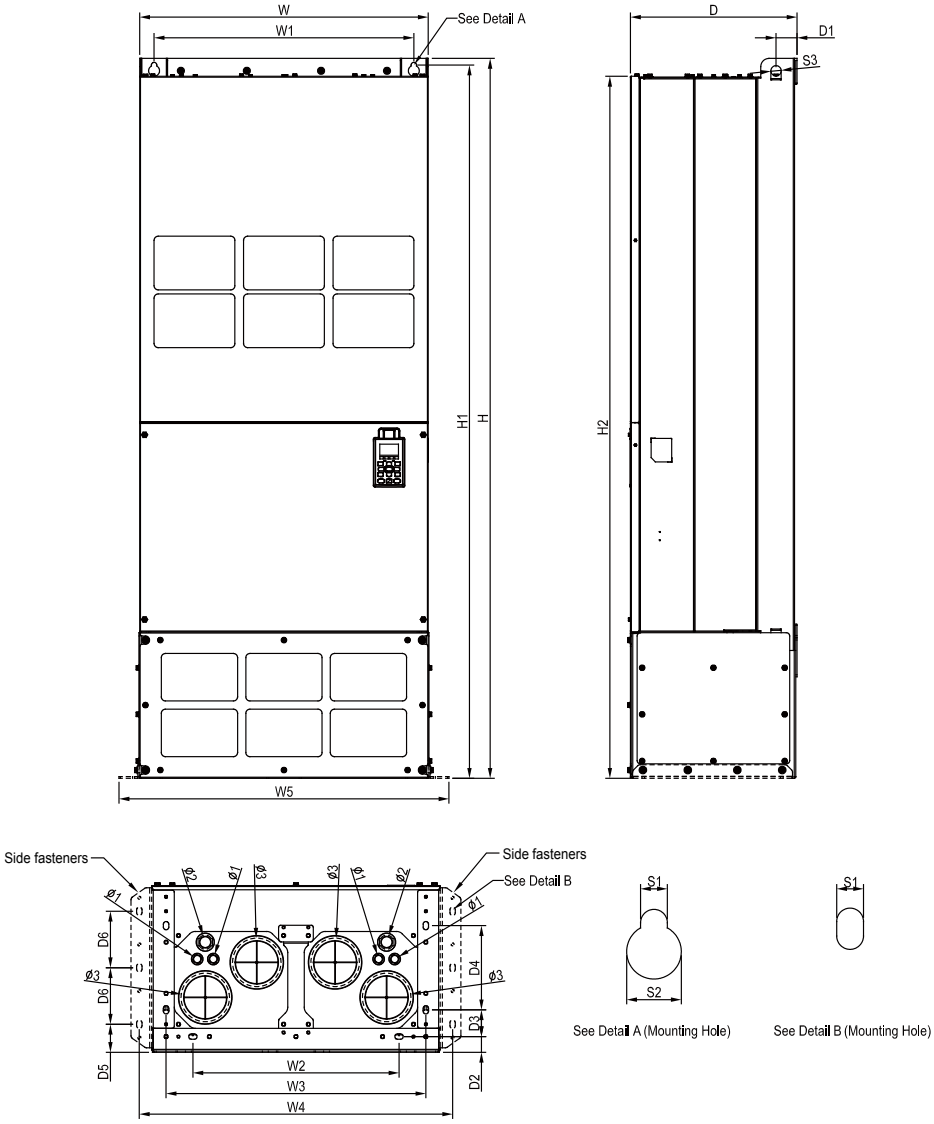

MODEL FRAME_H3
VFD2800C43E
VFD3150C43E
VFD3550C43E
VFD4500C43E

Frame		W	H	D	W1	W2	W3	W4	W5	W6	H1	H2	H3	H4
H3	mm	700.0	1745.0	404.0	630.0	500.0	630.0	760.0	800.0	-	1729.0	1701.6	-	-
	inch	27.56	68.70	15.9	24.80	19.69	24.80	29.92	31.50	-	68.07	66.99	-	-
Frame		**H5**	**D1**	**D2**	**D3**	**D4**	**D5**	**D6**	**S1**	**S2**	**S3**	**Ø1**	**Ø2**	**Ø3**
H3	mm	-	51.0	38.0	65.0	204.0	68.0	137.0	13.0	26.5	25.0	22.0	34.0	117.5
	inch	-	2.0	1.50	2.56	8.03	2.68	5.4	0.51	1.04	0.98	0.87	1.34	4.63

690 V Frame H1

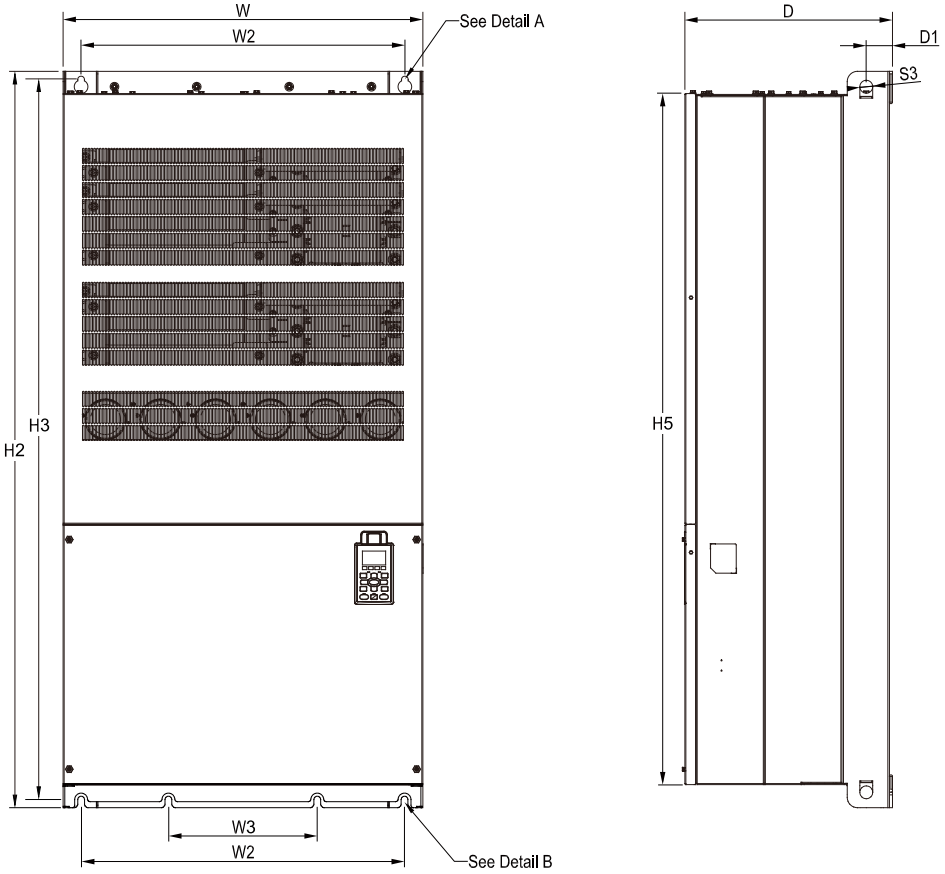

MODEL 690V FRAME_H1
VFD4000C63B-00
VFD4500C63B-00
VFD5600C63B-00
VFD6300C63B-00

Frame		W	H	D	W1	W2	W3	W4	W5	W6	H1	H2	H3	H4
H1	mm	700.0	-	398.0	-	630.0	290.0	-	-	-	-	1435.0	1403.0	-
	inch	27.56	-	15.67	-	24.80	11.42	-	-	-	-	56.50	55.24	-
Frame		**H5**	**D1**	**D2**	**D3**	**D4**	**D5**	**D6**	**S1**	**S2**	**S3**	**Ø1**	**Ø2**	**Ø3**
H1	mm	1346.6	45.0	-	-	-	-	-	13.0	26.5	25.0	-	-	-
	inch	53.02	1.77	-	-	-	-	-	0.51	1.04	0.98	-	-	-

690 V Frame H2

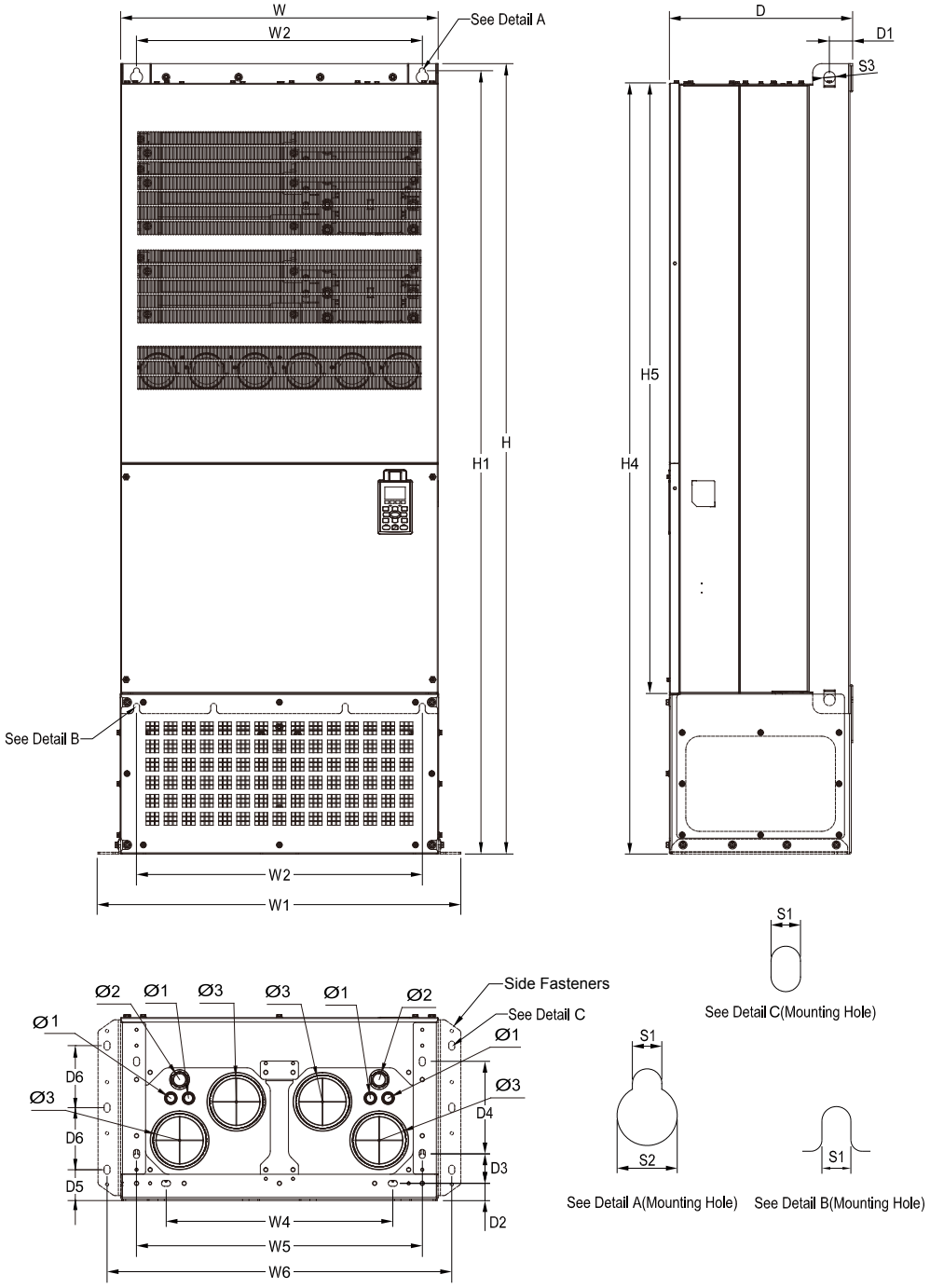

MODEL
690V FRAME_H2

VFD4000C63B-21
VFD4500C63B-21
VFD5600C63B-21
VFD6300C63B-21

Frame		W	H	D	W1	W2	W3	W4	W5	W6	H1	H2	H3	H4
H2	mm	700.0	1745.0	404.0	800.0	630.0	-	500.0	630.0	760.0	1729.0	-	-	1701.6
	inch	27.56	68.70	15.91	31.50	24.80	-	19.69	24.80	29.92	68.07	-	-	66.99
Frame		**H5**	**D1**	**D2**	**D3**	**D4**	**D5**	**D6**	**S1**	**S2**	**S3**	**Ø1**	**Ø2**	**Ø3**
H2	mm	1346.6	51.0	38.0	65.0	204.0	68.0	137.0	13.0	26.5	25.0	22.0	34.0	117.5
	inch	53.02	2.01	1.50	2.56	8.03	2.68	5.39	0.51	1.04	0.98	0.87	1.34	4.63

Accessories

▪ EMC-PG01L / EMC-PG02L

Set by
Pr.10-00 ~ 10-02

Terminals		Description
PG1	VP	Output voltage for power: +5 V / +12 V ± 5% (use FSW3 to switch +5 V / +12 V) Max. output current: 200 mA
	DCM	Common for power and signal
	A1, /A1, B1, /B1, Z1, /Z1	Encoder input signal (Line Driver) Open collector input: +5 V / +24 V (Note1) 1-phase or 2-phase input Max. input frequency: EMC-PG01L: 300KHz; EMC-PG02L: 30KHz
PG2	A2, /A2, B2, /B2	Pulse input signal (Line Driver or Open Collector) Open collector input: +5 V / +24 V (Note1) 1-phase or 2-phase input Max. input frequency: EMC-PG01L: 300KHz; EMC-PG02L: 30KHz
PG OUT	AO, /AO, BO, /BO, ZO, /ZO, SG	PG card output signals. Division frequency function: 1 ~ 255 times Max. output voltage for Line driver: 5 V_{DC} Max. output current: 50 mA Max. output frequency: EMC-PG01L: 300KHz; EMC-PG02L: 30KHz SG: The GND of PG card is the same as the host controller or PLC, so a common output signal is attained.

▪ EMC-PG01O / EMC-PG02O

Set by
Pr.10-00 ~ 10-02

Terminals		Description
PG1	VP	Output voltage for power: +5 V / +12 V ± 5% (use FSW3 to switch +5 V / +12 V) Max. output current: 200 mA
	DCM	Common for power and signal
	A1, /A1 ,B1, /B1, Z1, /Z1	Encoder input signal (Line Driver or Open Collector) Open collector input: +5 V / +24 V (Note1) 1-phase or 2-phase input Max. input frequency: EMC-PG01O: 300KHz; EMC-PG02O: 30KHz
PG2	A2, /A2, B2, /B2	Pulse input signal (Line Driver or Open Collector) Open collector input: +5 V / +24 V (Note1) 1-phase or 2-phase input Max. input frequency: EMC-PG01O: 300KHz; EMC-PG02O: 30KHz
PG OUT	V+, /V-	Needs external power source for PG OUT circuit. Input voltage of power:+12 V ~ +24 V
	V-	Negative power supply input
	A / O, B / O, Z / O	PG card output signals. Division frequency function: 1 ~ 255 times Add a pull-up resistor to the open collector output signals to avoid signal interferences. [Three pull-up resistors are included in the package (1.8 KΩ / 1 W)] Max. Output current: 20 mA Max output frequency: EMC-PG01O: 300KHz; EMC-PG02O: 30KHz

▪ EMC-PG01R

Set by
Pr.10-00 ~ 10-02

Terminals		Description
PG1	R1- R2	Resolver output power 7 Vrms, 10 kHz
	S1,S2, S3, S4	Resolver input signal 3.5 ± 0.175 Vrms, 10 kHz
PG2	A2, /A2, B2, /B2	Pulse input signal (Line Driver or Open Collector) Open collector input: +5 V / +24 V (Note1) 1-phase or 2-phase input; Max. input frequency: 300 KHz
PG OUT	AO, /AO, BO, /BO, ZO, /ZO, SG	PG card output signals. Division frequency function: 1 ~ 255 times Max. output voltage for Line driver: 5 V_{DC} Max. output current: 50 mA Max. output frequency: 300 KHz SG: The GND of PG card is the same as the host controller or PLC, so a common output signal is attained.

▪ EMC-PG01U / EMC-PG02U

FJMP1 Ⓢ: Standard UVW Output Encoder; Ⓓ: Delta Encoder

Set by
Pr.10-00 ~ 10-02

Terminals		Description
PG1	VP	Output voltage for power: +5 V / +12 V ± 5% (use FSW3 to switch +5 V / +12 V) Max. output current: 200 mA
	DCM	Common for power and signal
	A1, /A1 ,B1, /B1, Z1, /Z1	Encoder input signal (Line Driver) 1-phase or 2-phase input. Max. input frequency: 300 KHz
	U1, /U1, V1, /V1, W1, /W1	Encoder input signal
PG2	A2, /A2, B2, /B2	Pulse input signal Open collector input: +5 V / +24 V (Note1) 1-phase or 2-phase input; Max. input frequency: 300KHZ
PG OUT	AO, /AO, BO, /BO, ZO, /ZO, SG	PG card output signals. Division frequency function: 1 ~ 255 times Max. output voltage for Line driver: 5 V_{DC} Max. output current: 50 mA Max. output frequency: 300 KHz SG: The GND of PG card is the same as the host controller or PLC, so a common output signal is attained.

Note 1: For the Open Collector, set input voltage to 5 ~ 15 mA and install a pull-up resistor
[5 V] Recommend pull-up resistor: 100 ~ 220 Ω, 1 / 2 W and above
[12 V] Recommend pull-up resistor: 510 ~ 1.35 KΩ, 1 / 2 W and above
[24 V] Recommend pull-up resistor: 1.8K ~ 3.3 KΩ, 1 / 2 W and above

▪ EMC-D42A

I/O Extension Card

Terminals	Description
COM	Common for multi-function input terminals Select SINK (NPN) / SOURCE (PNP) in J1 jumper / external power supply
MI10 ~ MI13	Refer to Pr. 02-26 ~ Pr. 02-29 to program the multi-function inputs MI10 ~ MI13. Internal power is applied from terminal E24: +24 V_{DC} ± 5% 200 mA, 5 W External power +24 V_{DC}: max. voltage 30 V_{DC}, min. voltage 19 V_{DC}, 30 W ON: the activation current is 6.5 mA; OFF: leakage current tolerance is 10 μA
MO10 ~ MO11	Multi-function output terminals (photocoupler) Duty-cycle: 50%; Max. output frequency: 100 Hz Max. current: 50 mA; Max. voltage: 48 V_{DC}
MXM	Common for multi-function output terminals MO10, MO11 (photocoupler) Max 48 V_{DC} 50 mA

▪ EMC-D611A

I/O Extension Card

Terminals	Description
AC	AC power common for multi-function input terminal (Neutral)
MI10 ~ MI15	Refer to Pr. 02-26 ~ Pr. 02-31 for multi-function input selection Input voltage: 100 ~ 130 V_{AC}; Input frequency: 57 ~ 63 Hz Input impedance: 27 KΩ Terminal response time: ON: 10 ms; OFF: 20 ms

EMC-R6AA

	Terminals	Description
Relay Extension Card	RA10 ~ RA15 RC10 ~ RC15	Refer to Pr. 02-36 ~ Pr. 02-41 for multi-function output selection Resistive load: 3A (N.O.) / 250 V_{AC} 5A (N.O.) / 30 V_{DC} Inductive load (COS 0.4) 2.0A (N.O.) / 250 V_{AC} 2.0A (N.O.) / 30 V_{DC} It is used to output each monitor signal, such as for drive in operation, frequency attained or overload indication.

EMC-A22A

	Terminals	Description
Analog I/O extension card	AVI10 AVI11	Refer to Pr. 14-00 ~ Pr. 14-01 for function selection (input), and Pr. 14-18 ~ Pr. 14-19 for mode selection. There are two sets of AVI port, SSW3(AVI10) and SSW4(AVI11), which can be switched to AVI or ACI. AVI: Input 0 ~ 10V ACI: Input 0 ~ 20mA / 4 ~ 20mA
	AFM10 AFM11	Refer to Pr. 14-12 ~ Pr. 14-13 for function selection (output), and Pr. 14-36 ~ Pr. 14-37 for mode selection. There are two sets of AFM port, SSW1(AFM10) and SSW2(AFM11), which can be switched to AVO or ACO. AVO: Output 0 ~ 10.00V ACO: Output 0 ~ 20.0mA / 4.0 ~ 20.0mA
	ACM	Analog signal common terminal

EMC-BPS01

	Terminals	Description
24V Power Shift Card	24V GND	When the AC motor drive power is off, the external power supply card provides external power to the network system, PLC function, and other functions to allow continued operations. Input power: 24 V_{DC} ±5% Maximum input current: 0.5A Note: Do not connect the control terminal +24V (Digital control signal common: SOURCE) directly to the EMC-BPS01 input terminal 24V. Do not connect control terminal GND directly to the EMC-BPS01 input terminal GND.

▪ CMC-MOD01

Network Interface

Features

- Supports MODBUS TCP protocol
- MDI / MDI-X auto-detect
- AC motor drive keypad / Ethernet configuration
- E-mail alarm
- Baud rate: 10 / 100 Mbps auto-detect
- Virtual serial port

Network Interface

Interface	RJ-45 with Auto MDI / MDIX	**Transmission speed**	10 / 100 Mbps Auto-Detect
Number of ports	1 Port	**Network protocol**	ICMP, IP, TCP, UDP, DHCP, SMTP, MODBUS over TCP / IP, Delta Configuration
Transmission method	IEEE 802.3, IEEE 802.3u		
Transmission cable	Category 5e shielding 100 M		

▪ CMC-EIP01

Network Interface

Features

- Supports Ethernet / IP protocol
- MDI / MDI-X auto-detect
- Baud rate: 10 / 100 Mbps auto-detect
- AC motor drive keypad / Ethernet configuration
- Virtual serial port

Network Interface

Interface	RJ-45 with Auto MDI / MDIX	**Transmission speed**	10 / 100 Mbps Auto-Detect
Number of ports	1 Port	**Network protocol**	ICMP, IP, TCP, UDP, DHCP, SMTP, MODBUS over TCP / IP, Delta Configuration
Transmission method	IEEE 802.3, IEEE 802.3u		
Transmission cable	Category 5e shielding 100 M		

▪ CMC-EC01 NEW

Features

- Supports Ethernet CAT protocol
- Supports standard CiA402 speed mode
- Supports SDO (Service Data Objects) function:
  - To write motor drive parameters
  - To read motor drive information
- Auto shutdown function for interruptions during data transmission

Network Interface

Interface	RJ-45	**Transmission speed**	100 Mbps
Number of ports	2 Ports	**Network protocol**	EtherCAT
Transmission method	IEEE 802.3, IEEE 802.3u		
Transmission cable	Category 5e shielding 100 M		

▪ CMC-PD01

Features

- Supports PROFIBUS DP protocol
- Supports PZD control data exchange
- Supports PKW polling AC motor drive parameters
- Supports user diagnosis function
- Auto-detects baud rates; supports Max. 12 Mbps

PROFIBUS DP Connector

Interface	DB9 connector
Transmission method	High-speed RS-485
Transmission cable	Shielded twisted pair cable
Electrical isolation	500 V_{DC}

Communication

Message type	Cyclic data exchange
Module name	CMC-PD01
GSD document	DELA08DB.GSD
Company ID	08DB (HEX)
Serial transmission speed supported (auto-detection)	9.6 kbps; 19.2 kbps; 93.75 kbps; 187.5 kbps; 125 kbps; 250 kbps; 500 kbps; 1.5 Mbps; 3 Mbps; 6 Mbps; 12 Mbps (bits per second)

▪ CMC-DN01

Features

- Supports all baud rates on DeviceNet bus: 125 kbps, 250 kbps, 500 kbps and extendable serial transmission speed mode
- Based on the high-speed communication interface of Delta HSSP protocol, able to conduct immediate control of an AC motor drive
- Supports Group 2 only connection and polling I/O data exchange
- For I/O mapping, supports Max. 32 words of input and 32 words of output
- Supports EDS file configuration in DeviceNet configuration software
- Node address and serial transmission speed can be set up on AC motor drive
- Power supplied from AC motor drive

DeviceNet Connector

Interface	5-Pin 5.08mm pluggable connector
Transmission method	CAN
Transmission cable	Shielded twisted pair cable (with 2 power cables)
Transmission speed	125 kbps, 250 kbps, 500 kbps and extendable serial transmission speed mode
Network protocol	DeviceNet protocol

DeviceNet Connector

Interface	50 PIN communication terminal
Transmission method	SPI communication
Terminal function	1. Communicating with AC motor drive 2. Transmitting power supply from AC motor drive
Communication protocol	Delta HSSP protocol

▪ EMC-COP01

Built-in EMC-COP01 card are available for VFDXXXC23E and VFDXXXC43E

RJ-45 Pin definition

Male

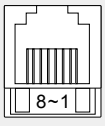

Female

Pin	Pin name	Definition
1	CAN_H	CAN_H bus line (dominant high)
2	CAN_L	CAN_L bus line (dominant low)
3	CAN_GND	Ground / 0 V / V-
6	CAN_GND	Ground / 0 V / V-

Accessories

Delta Standard Fieldbus Cables

Delta Cables	Part Number	Description	Length
CANopen Cable	UC-CMC003-01A	CANopen cable, RJ45 connector	0.3 m
	UC-CMC005-01A	CANopen cable, RJ45 connector	0.5 m
	UC-CMC010-01A	CANopen cable, RJ45 connector	1 m
	UC-CMC015-01A	CANopen cable, RJ45 connector	1.5 m
	UC-CMC020-01A	CANopen cable, RJ45 connector	2 m
	UC-CMC030-01A	CANopen cable, RJ45 connector	3 m
	UC-CMC050-01A	CANopen cable, RJ45 connector	5 m
	UC-CMC100-01A	CANopen cable, RJ45 connector	10 m
	UC-CMC200-01A	CANopen cable, RJ45 connector	20 m
DeviceNet Cable	UC-DN01Z-01A	DeviceNet cable	305 m
	UC-DN01Z-02A	DeviceNet cable	305 m
EtherNet Cable	UC-EMC003-02A	EtherNet / EtherCAT cable, Shielding	0.3 m
	UC-EMC005-02A	EtherNet / EtherCAT cable, Shielding	0.5 m
	UC-EMC010-02A	EtherNet / EtherCAT cable, Shielding	1 m
	UC-EMC020-02A	EtherNet / EtherCAT cable, Shielding	2 m
	UC-EMC050-02A	EtherNet / EtherCAT cable, Shielding	5 m
	UC-EMC100-02A	EtherNet / EtherCAT cable, Shielding	10 m
	UC-EMC200-02A	EtherNet / EtherCAT cable, Shielding	20 m
CANopen / DeviceNet TAP	TAP-CN01	1 in 2 out, built-in 121Ω terminal resistor	1 in 2 out
	TAP-CN02	1 in 4 out, built-in 121Ω terminal resistor	1 in 4 out
	TAP-CN03	1 in 4 out, RJ45 connector, built-in 121Ω terminal resistor	1 in 4 out
PROFIBUS Cable	UC-PF01Z-01A	PROFIBUS DP cable	305 m

Unit: mm

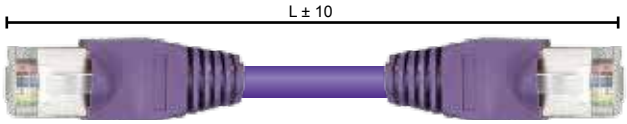

CANopen Breakout Box

Model: TAP-CN03
Unit: mm [inch]

Model Name

- **230 V / 460 V:**

VFD 007 C 43 A

Version

- A Wall mount
- S Smaller size
- U Smaller size with junction box
- E Built-in EMC filter (Frame A~C), Built-in conduit box (Frame D and above)

Input voltage

- 23 230 V 3-Phase
- 43 460 V 3-Phase

Product Series

- C C2000

Applicable Motor Capacity

007: 1 HP (0.75 kW) ~ 4500: 600 HP (450 kW)

* Refer to product specification for detailed information

Series Name

Variable Frequency Drive

- **575 V / 690 V:**

VFD 007 C 43 A - 2 1

NEMA Protection Level

- 0 UL Open Type
- 1 NEMA 1

IP Protection Level

- 0 IP00
- 2 IP20

Version

- A Wall mount
- B Wall mount with 690V rated current

Input Voltage

- 53 575 V 3-Phase
- 63 690 V 3-Phase

Product Series

- C C2000

Applicable Motor Capacity

015: 2 HP (1.5 kW) ~ 6300: 675 HP (630 kW)

* Refer to product specification for detailed information

Series Name

Variable Frequency Drive

Ordering Information

Frame Size		Power Range	Models			
Frame A		230 V: 0.75 ~ 3.7 kW 460 V: 0.75 ~ 5.5 kW 575 V: 1.5 ~ 3.7 kW	VFD007C23A VFD015C23A VFD022C23A VFD037C23A	VFD007C43A VFD015C43A VFD022C43A VFD037C43A VFD040C43A VFD055C43A	VFD007C43E VFD015C43E VFD022C43E VFD037C43E VFD040C43E VFD055C43E	VFD015C53A-21 VFD022C53A-21 VFD037C53A-21
Frame B		230 V: 5.5 ~ 11 kW 460 V: 7.5 ~ 15 kW 575 V: 5.5 ~ 15 kW	VFD055C23A VFD075C23A VFD110C23A	VFD075C43A VFD110C43A VFD150C43A	VFD075C43E VFD110C43E VFD150C43E	VFD055C53A-21 VFD075C53A-21 VFD110C53A-21 VFD150C53A-21
Frame C		230 V: 15 ~ 22 kW 460 V: 18.5 ~ 30 kW 690 V: 18.5 ~ 37 kW	VFD150C23A VFD185C23A VFD220C23A	VFD185C43A VFD220C43A VFD300C43A	VFD185C43E VFD220C43E VFD300C43E	VFD185C63B-21 VFD220C63B-21 VFD300C63B-21 VFD370C63B-21
Frame D		230 V: 30 ~ 37 kW 460 V: 37 ~ 75 kW 690 V: 55 ~ 75 kW	**Frame**_D1 VFD300C23A VFD370C23A VFD550C43A VFD750C43A VFD450C63B-00 VFD550C63B-00	**Frame**_D0-1 VFD370C43S VFD450C43S	**Frame**_D2 VFD300C23E VFD370C23E VFD550C43E VFD750C43E VFD450C63B-21 VFD550C63B-21	**Frame**_D0-2 VFD370C43U VFD450C43U
Frame E		230 V: 45 ~ 75 kW 460 V: 90 ~ 110 kW 690 V: 75 ~ 132 kW	**Frame**_E1 VFD450C23A VFD550C23A VFD750C23A VFD900C43A VFD1100C43A VFD750C63B-00 VFD900C63B-00 VFD1100C63B-00 VFD1320C63B-00	**Frame**_E2 VFD450C23E VFD550C23E VFD750C23E VFD900C43E VFD1100C43E VFD750C63B-21 VFD900C63B-21 VFD1100C63B-21 VFD1320C63B-21		
Frame F		230 V: 90 kW 460 V: 132 ~ 160 kW 690 V: 160 ~ 200 kW	**Frame**_F1 VFD900C 23A VFD1320C 43A VFD1600C 43A VFD1600C63B-00 VFD2000C63B-00	**Frame**_F2 VFD900C 23E VFD1320C 43E VFD1600C 43E VFD1600C63B-21 VFD2000C63B-21		

Frame Size		Power Range	Models		
Frame G		460 V: 185 ~ 220 kW 690 V: 250 ~ 315 kW	**Frame**_G1 VFD1850C43A VFD2200C43A VFD2500C63B-00 VFD3150C63B-00	**Frame**_G2 VFD1850C43E VFD2200C43E VFD2500C63B-21 VFD3150C63B-21	
Frame H		460 V: 280 ~ 450 kW	**Frame**_H1 VFD2800C43A VFD3150C43A VFD3550C43A VFD4500C43A	**Frame**_H2 VFD2800C43E-1 VFD3150C43E-1 VFD3550C43E-1 VFD4500C43E-1	**Frame**_H3 VFD2800C43E VFD3150C43E VFD3550C43E VFD4500C43E
Frame H **(690 V Model)**		690 V: 400 ~ 630 kW	**Frame**_H1 VFD4000C63B-00 VFD4500C63B-00 VFD5600C63B-00 VFD6300C63B-00	**Frame**_H2 VFD4000C63B-21 VFD4500C63B-21 VFD5600C63B-21 VFD6300C63B-21	

Global Operations

ASIA (Taiwan)

Taoyuan
Technology Center
(Green Building)

Taoyuan Plant 1

Taoyuan Plant
(Diamond-rated Green Building)

ASIA (China)

Wujiang Plant 3

Delta Electronics

ASIA (Japan)

Tokyo Office

ASIA (India)

Rudrapur Plant
(Green Building)

EUROPE

Amsterdam, Netherlands

AMERICA

Research Triangle Park

▲ Factories 4 ■ Branch Offices 122 ⊙ R&D Centers 5 ▪ Distributors 733

Smarter. Greener. Together.

Industrial Automation Headquarters

Delta Electronics, Inc.
Taoyuan Technology Center
No.18, Xinglong Rd., Taoyuan District,
Taoyuan City 33068, Taiwan
TEL: 886-3-362-6301 / FAX: 886-3-371-6301

Asia

Delta Electronics (Shanghai) Co., Ltd.
No.182 Minyu Rd., Pudong Shanghai, P.R.C.
Post code : 201209
TEL: 86-21-6872-3988 / FAX: 86-21-6872-3996
Customer Service: 400-820-9595

Delta Electronics (Japan), Inc.
Tokyo Office
Industrial Automation Sales Department
2-1-14 Shibadaimon, Minato-ku
Tokyo, Japan 105-0012
TEL: 81-3-5733-1155 / FAX: 81-3-5733-1255

Delta Electronics (Korea), Inc.
Seoul Office
1511, 219, Gasan Digital 1-Ro., Geumcheon-gu,
Seoul, 08501 South Korea
TEL: 82-2-515-5305 / FAX: 82-2-515-5302

Delta Energy Systems (Singapore) Pte Ltd.
4 Kaki Bukit Avenue 1, #05-04, Singapore 417939
TEL: 65-6747-5155 / FAX: 65-6744-9228

Delta Electronics (India) Pvt. Ltd.
Plot No.43, Sector 35, HSIIDC Gurgaon,
PIN 122001, Haryana, India
TEL: 91-124-4874900 / FAX : 91-124-4874945

Delta Electronics (Thailand) PCL.
909 Soi 9, Moo 4, Bangpoo Industrial Estate (E.P.Z),
Pattana 1 Rd., T.Phraksa, A.Muang,
Samutprakarn 10280, Thailand
TEL: 66-2709-2800 / FAX : 662-709-2827

Delta Energy Systems (Australia) Pty Ltd.
Unit 20-21/45 Normanby Rd., Notting Hill Vic 3168, Australia
TEL: 61-3-9543-3720

Americas

Delta Electronics (Americas) Ltd.
Raleigh Office
P.O. Box 12173, 5101 Davis Drive,
Research Triangle Park, NC 27709, U.S.A.
TEL: 1-919-767-3813 / FAX: 1-919-767-3969

Delta Greentech (Brasil) S/A
São Paulo Office
Rua Itapeva, 26 – 3˚ Andar - Bela Vista
CEP: 01332-000 – São Paulo – SP - Brasil
TEL: 55-11-3530-8642 / 55-11-3530-8640

Delta Electronics International Mexico S.A. de C.V.
Mexico Office
Vía Dr. Gustavo Baz No. 2160, Colonia La Loma,
54060 Tlalnepantla Estado de Mexico
TEL: 52-55-2628-3015 #3050/3052

EMEA

Delta Electronics (Netherlands) BV
Eindhoven Office
De Witbogt 20, 5652 AG Eindhoven, The Netherlands
MAIL: Sales.IA.EMEA@deltaww.com
MAIL: Sales.IA.Benelux@deltaww.com

Delta Electronics (France) S.A.
ZI du bois Chaland 2 15 rue des Pyrénées,
Lisses 91056 Evry Cedex, France
MAIL: Sales.IA.FR@deltaww.com

Delta Electronics Solutions (Spain) S.L.U
Ctra. De Villaverde a Vallecas, 265 1˚ Dcha Ed.
Hormigueras – P.I. de Vallecas 28031 Madrid
C/Llull, 321-329 (Edifici CINC) | 22@Barcrelona, 08019 Barcelona
MAIL: Sales.IA.Iberia@deltaww.com

Delta Electronics (Italy) Srl
Ufficio di Milano Via Senigallia 18/2 20161 Milano (MI)
Piazza Grazioli 18 00186 Roma, Italy
MAIL: Sales.IA.Italy@deltaww.com

Delta Electronics (Germany) GmbH
Coesterweg 45, D-59494 Soest, Germany
MAIL: Sales.IA.DACH@deltaww.com

Delta Energy Systems LLC (CIS)
Vereyskaya Plaza II, office 112 Vereyskaya str.
17 121357 Moscow, Russia
MAIL: Sales.IA.RU@deltaww.com

Delta Greentech Ltd. (Turkiye)
Serifali Mevkii Barboros Bulvari Soylesi Sok
No 19 34775, Y.Dudullu-Umraniye/Istanbul
MAIL: Sales.IA.Turkey@delta-emea.com

Delta Energy Systems AG (Dubai BR)
P.O. Box 185668, Gate 7, 3rd Floor, Hamarain Centre,
Dubai, United Arab Emirates
MAIL: Sales.IA.MEA@deltaww.com

*We reserve the right to change the information in this catalogue without prior notice.

DELTA_IA-MDS_C2000_C_EN_20180131